Polo 1995 ➤

1AV fuel injection and ignition system (2-valve)									
Engine ID	AEE								

Edition 08.1995

Protected by copyright. Copying for private or commercial purposes, in part or in whole, is not permitted unless authorised by Volkswagen AG. Volkswagen AG does not guarantee or accept any liability with respect to the correctness of information in this document. Copyright by Volkswagen AG.

satelettronica

List of Workshop Manual Repair GroupsList of Workshop Manual Repair GroupsList of Workshop Manual Repair Groups

Polo 1995 ➤

1AV fuel injection and ignition system (2-valve)

Protected by copyright. Copying for private or commercial purposes, in part or in whole, is not permitted unless authorised by Volkswagen AG. Volkswagen AG does not guarantee or accept any liability with respect to the correctness of information in this document. Copyright by Volkswagen AG.

Repair Group

01 - Self-diagnosis

24 - Mixture preparation, Injection

28 - Ignition system

satelettronica

Technical information should always be available to the foremen and mechanics, because their careful and constant adherence to the instructions is essential to ensure vehicle road-worthiness and safety. In addition, the normal basic safety precautions for working on motor vehicles must, as a matter of course, be observed.

All rights reserved.
No reproduction without prior agreement from publisher.

Copyright © 2010 Volkswagen AG, Wolfsburg

00050206120

Contents

01 - Self-diagnosis . . . 1

1 Self diagnosis . . . 1
1.1 Self diagnosis . . . 1
1.2 Features of self-diagnosis . . . 1
1.3 Technical data of self diagnosis . . . 1
1.4 Connecting fault reader V.A.G 1551 and selecting engine control unit . . . 2
1.5 Interrogating and erasing fault memory . . . 3
1.6 Fault table . . . 5
1.7 Final control diagnosis . . . 10
1.8 Read measured value block and basic settings . . . 13
1.9 Display group overview . . . 14

24 - Mixture preparation, Injection . . . 17

1 Servicing injection system . . . 17
1.1 Servicing injection system . . . 17
1.2 Fitting locations overview . . . 17
1.3 General notes on injection . . . 19
1.4 Removing and installing parts of the injection system . . . 21
1.5 Dismantling and assembling fuel manifold with injectors . . . 27
1.6 Dismantling and assembling intake manifold . . . 28
1.7 Dismantling and assembling air cleaner . . . 31
1.8 Safety precautions . . . 34
1.9 Rules for cleanliness . . . 34
1.10 Technical data . . . 34
1.11 Performing basic setting . . . 35
1.12 Checking Lambda probe and Lambda control . . . 36
1.13 Checking Lambda probe heating . . . 38
1.14 Checking engine operating mode . . . 39
1.15 Checking throttle valve control part . . . 41
1.16 Checking intake manifold pressure sender . . . 47
1.17 Checking speed signal . . . 49
1.18 Checking coolant temperature sender . . . 51
1.19 Checking intake air temperature sender . . . 54
1.20 Checking control unit voltage supply . . . 56
1.21 Matching engine control unit to electronic immobilizer . . . 58
1.22 Checking air conditioner and air conditioner compressor signals . . . 59
1.23 Checking injectors . . . 60
1.24 Checking fuel pressure regulator and holding pressure . . . 62
1.25 Checking intake air system for leaks (unmetered air) . . . 65
1.26 Checking intake air preheating . . . 65
1.27 Wire routing engine wiring loom . . . 67

28 - Ignition system . . . 69

1 Servicing ignition system . . . 69
1.1 Servicing ignition system . . . 69
1.2 General notes to ignition system . . . 69
1.3 Removing and installing parts of the ignition system . . . 70
1.4 Dismantling and assembling distributor . . . 73
1.5 Safety precautions . . . 74
1.6 Adjustment data, Spark plugs . . . 74
1.7 Checking and adjusting ignition timing . . . 74
1.8 Checking Hall sender . . . 76
1.9 Checking ignition transformer . . . 77
1.10 Checking ignition transformer output stage . . . 77

Protected by copyright. Copying for private or commercial purposes, in part or in whole, is not permitted unless authorised by Volkswagen AG. Volkswagen AG does not guarantee or accept any liability with respect to the correctness of information in this document. Copyright by Volkswagen AG.
satelettronica

1.11 Checking knock sensor 79

Protected by copyright. Copying for private or commercial purposes, in part or in whole, is not permitted unless authorised by Volkswagen AG. Volkswagen AG does not guarantee or accept any liability with respect to the correctness of information in this document. Copyright by Volkswagen AG.

satelettronica

01 - Self-diagnosis

1 - Self diagnosis

1.1 - Self diagnosis

Note:

The self-diagnosis monitors only a part of the injection and ignition system. For fault finding the binder "Fault finding engine" must also be used in every case.

1.2 - Features of self-diagnosis

The engine control unit (control unit for 1AV fuel injection and ignition system -J382) is equipped with a fault memory.

If faults occur in the sensors and components being monitored, they will be stored in the fault memory together with an indication of the type of fault.

Faults which only occur sporadically will have the addition "sporadic fault" on the print out. These faults will be indicated on the display by the addition "/SP". The cause of sporadic faults can be e.g. a loose contact or a brief open circuit. If a sporadic fault does not occur again within 40 engine starts, it will be erased from the fault memory.

The faults stored can be read-out with the fault reader V.A.G 1551 or the vehicle system tester V.A.G 1552 => Page 3 .

The fault memory must be erased after the faults has been eliminated => Page 3 .

Note:

General information for self-diagnosis is in the fault reader V.A.G 1551 and the vehicle system tester V.A.G 1552 instruction manuals.

1.3 - Technical data of self diagnosis

Equipped with

- The data transfer between control unit and fault reader V.A.G 1551 or vehicle system tester V.A.G 1552 is carried out in the operating mode "Rapid data transfer".
- The fault memory is equipped with a non-volatile memory.

Interrogating control unit versions

The control unit version is displayed when the fault reader V.A.G 1551 or the vehicle system tester V.A.G 1552 is connected and engine electronics control unit selected => Page 2 .

Selectable functions when using the fault reader V.A.G 1551 or V.A.G 1552

The prerequisites for selecting the desired functions can be taken from the following table.

Protected by copyright. Copying for private or commercial purposes, in part or in whole, is not permitted unless authorised by Volkswagen AG. Volkswagen AG does not guarantee or accept any liability with respect to the correctness of information in this document. Copyright by Volkswagen AG.
satelettronica

Function	Prerequisite	
	Engine stationary, ignition switched on	Engine running at idling speed
02 Interrogating fault memory	yes	yes
03 Final control diagnosis	yes	no
04 Basic setting	yes1)	yes2)3)
05 Erasing fault memory	yes	yes
06 Ending output	yes	yes
08 Read measured value block	yes	yes
09 Read individual measured value4)	yes	yes

1) Must be carried out after performing the following work:
Replacing control unit, throttle valve control part or engine.

2) Only possible when the coolant temperature is above 80 °C. Prior to this, this function is blocked.

3) Must be carried out when checking and adjusting the ignition timing point.

4) Currently is only used for checks in the factory.

1.4 - Connecting fault reader V.A.G 1551 and selecting engine control unit

Protected by copyright. Copying for private or commercial purposes, in part or in whole, is not permitted unless authorised by Volkswagen AG. Volkswagen AG does not guarantee or accept any liability with respect to the correctness of information in this document. Copyright by Volkswagen AG.

Special tools, testers, measuring instruments and auxiliary items required

- Fault reader V.A.G 1551 with cable V.A.G 1551/3

Note:

The vehicle system tester V.A.G 1552 can be used instead of the fault reader V.A.G 1551, however a print-out is not possible.

Check conditions

- Battery voltage at least 11 V
- Fuse 21 OK.

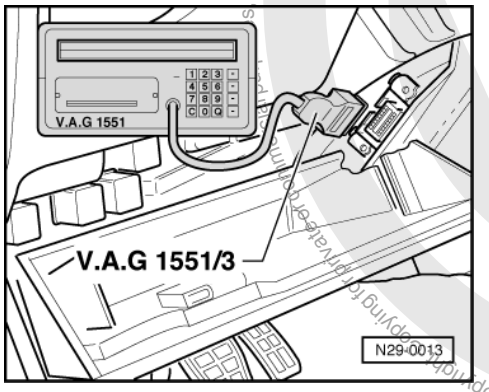

- Earth connections on front of clutch housing/on cylinder head OK.

satelettronica

Protected by copyright. Copying for private or commercial purposes, in part or in whole, is not permitted unless authorised by Volkswagen AG. Volkswagen AG does not guarantee or accept any liability with respect to the correctness of information in this document. Copyright by Volkswagen AG.

satelettronica

Work sequence

- -> Fold driver's side stowage compartment down.
- Connect fault reader V.A.G 1551 with cable V.A.G 1551/3.

After the fault reader has been connected:

- Depending upon desired function:
  Switch ignition on
  or
  Start engine => Page 1 , Table "Selectable functions".

Notes:

- If the display remains blank, check diagnostic connector voltage supply =>Fault finding programme in "Current flow diagrams, Electrical fault finding and Fitting locations" binder
- If the display does not indicate as described in the work sequence:

=> Fault reader operating instructions

- If due to an input fault "Fault in the data transfer!" is displayed, pull wire off fault reader, reconnect and repeat work step.

-> Indicated on display:

```
V.A.G - SELF DIAGNOSIS     HELP
     1 - Rapid data transfer*
     2 - Flash code output*
```

* Appears alternately

- Operate fault reader taking into account the information on the display:
- Press key 1 for "Rapid data transfer".
- Press keys 0 and 1 for address word "Engine electronics" and confirm entry with Q key.

-> The fault reader V.A.G 1551 display will show the control unit identification, e.g.:

```
032906030D
```

- 032 906 030D = Part No. of control unit
- Marelli 1AV = System designation and version
- 1948 = Programme level number

- Press the ⇒key.

-> Indicated on display:

```
Rapid data transfer     HELP
Select function XX
```

- Further measures see repair procedures.

1.5 - Interrogating and erasing fault memory

Special tools, testers, measuring instruments and auxiliary items required

- Fault reader V.A.G 1551 (or vehicle system tester V.A.G 1552) with cable V.A.G 1551/3

Work sequence

- Connect fault reader V.A.G 1551 (V.A.G 1552). Start engine and select "Address word" 01 of engine control unit. When doing this the engine must be running at idling speed.

(Connecting fault reader and selecting engine control unit => Page 2 .)

Only when engine does not start:

- Switch ignition on.

- Switch on fault reader printer with the print key. The warning lamp in key must light up.

-> Indicated on display:

```
Rapid data transfer      HELP
Select function XX
```

- Operate fault reader taking into account the information on the display:
- Press keys 0 and 2 for function "Interrogate fault memory" and confirm entry with Q key.

-> The number of faults stored or "No fault recognised!" will be shown on the display.

```
X Faults recognised!
```

If one or more faults are stored:

The stored faults will be displayed and printed out one after the other.

-> After the stored faults have been printed out, the display will show:

```
Rapid data transfer      HELP
Select function XX
```

- Press keys 0 and 5 for the function "Erase fault memory" and confirm entry with Q key.

Note:

If the ignition is switched off between "Interrogate fault memory" and "Erase fault memory" the fault memory will not be erased.

-> Indicated on display:

```
Rapid data transfer
Fault memory is erased!
```

- Press the ⇒key.
- Press keys 0 and 6 for the function "End output" and confirm entry with the Q key.
- Eliminate the printed out faults using the appropriate fault table.
  => Page 5 .

During test and assembly work faults can be recognised from other control units like e.g. plug disconnected. Therefore on completion the fault memories of all control units must be interrogated and erased. To do this:

- Press key 0 twice for address word "Automatic test sequence" and confirm entry with Q key. The V.A.G 1551 transmits all known address words one after the other.

When a control unit answers with its identification the number of stored faults appears on the display or "No fault recognised".

Any system faults that are stored will be displayed one after the other and printed out. The V.A.G 1551 will then transmit the next address word.

-> The automatic test sequence has ended when following is indicated on display:

```
V.A.G SELF-DIAGNOSIS     HELP
1 - Rapid data transfer*
2 - Flash code output*
```

- Erase all fault memories and then carry out a road test.

  During the road test the following operating conditions must be fulfilled:
  - The coolant temperature must exceed 80 °C .
  - When the temperature is reached, the operating conditions

Protected by copyright. Copying for private or commercial purposes, in part or in whole, is not permitted unless authorised by Volkswagen AG. Volkswagen AG does not guarantee or accept any liability with respect to the correctness of information in this document. Copyright by Volkswagen AG.

satelettronica

Idling
Part throttle
Full throttle
Overrun
must be attained several times.
- At full throttle the speed must exceed 3500 rpm.

- Again interrogate the fault memories of all control units using the "automatic test sequence".

If no fault is stored:

- Press the ⇒key.

-> Indicated on display:

```
Rapid data transfer      HELP
Select function XX
```

- Press keys 0 and 6 for the function "End output" and confirm entry with the Q key.

Note:

If the self-diagnosis has not detected a fault, use the appropriate fault table in "Fault finding engine" binder for further fault finding.

1.6 - Fault table

Notes:

- The fault tables are listed according to the 5 digit fault code on the left.
- Explanation of the fault types (e.g. "open circuit/short circuit to earth"):

=> Fault reader operating instructions

- If components are indicated as faulty:
  First check the wiring and connectors to these components as well as the system earth connections according to current flow diagram. This is particularly relevant if faults are output as "occurring sporadically" (SP).

V.A.G 1551 print-out	Possible causes of fault	Possible effects	Fault remedy
No fault recognized!	If a complaint exists: Fault not recognised during self-diagnosis	---	Continue fault finding according to fault table, in "Engine fault finding" binder.
00282 Throttle valve positioner - V601)			
Short to earth	- Short to earth - V60 defective/sticking in direction closed	- Cold starting problems - Cold idling problems - Hard load changes - Idling problems	- Check V60 =>Page 41 , checking throttle valve control part
Short to positive	- Short to positive - V60 defective/sticking in direction open		
Open circuit	- Wiring open circuit		
Signal out of tolerance	- Short to earth and/or battery positive		

1) The throttle valve positioner (V60) is a component of the throttle valve control part (J338).

satelettronica

V.A.G 1551 print-out	Possible causes of fault	Possible effects	Fault remedy
00516 Idling switch -F601) Unplausible signal	- F60 defective	- Idling problems - Driving characteristics faults when driving off	- Carry out basic setting =>Page 41 , check throttle valve control part
00518 Throttle valve potentiometer -G692) Short to earth	- G69 defective - Wiring has short to earth	- Poor throttle response - Hard load changes	- Carry out basic setting =>Page 35
Open circuit/Short to positive	- Wiring open circuit in earth cable - Wiring has short to positive - G69 defective	- Increased emission values - No full throttle recognition	- Check G69 =>Page 41 , checking throttle valve control part

1) The idling speed switch (F60) is a component of the throttle valve control part (J338).

2) The throttle valve potentiometer (G69) is a component of the throttle valve control part (J338).

V.A.G 1551 print-out	Possible causes of fault	Possible effects	Fault remedy
00519 Intake manifold pipe pressure sender -G71 Short to positive	- Wiring has short to positive	- Increased emissions values	- Check G71 =>Page 47
Open circuit/short to earth	- Wiring open circuit in earth cable - Wiring has short to earth - G71 defective	- Poor throttle response - Hard load changes	
Implausible signal	- Loose contact - G71 defective		

V.A.G 1551 print-out	Possible causes of fault	Possible effects	Fault remedy
00522 Coolant temperature sender -G62 Short to earth	- Wiring has short to earth - G62 defective	- Poor cold starting - Poor hot starting	- Check G62 =>Page 51
Open circuit/short to positive	- Wiring open circuit or short to positive - G62 defective	- No idling speed adaption - Increased emissions values	
00523 Intake air temperature sender -G42 Short to earth	- Wiring has short to earth - G42 defective	- Poor hot starting - Increased emissions values	- Check G42 =>Page 54
Open circuit/short to positive	- Wiring open circuit or short to positive - G42 defective		

V.A.G 1551 print-out	Possible causes of fault	Possible effects	Fault remedy
00524 Knock sensor 1 -G61 Signal too small	- Wiring open circuit or short to earth - G61 defective	- Ignition timing point has been retarded 15 < ° - Reduced output - High fuel consumption	- Check G61 => Page 79

Protected by copyright. Copying for private or commercial purposes, in part or in whole, is not permitted unless authorised by Volkswagen AG. Volkswagen AG does not guarantee or accept any liability with respect to the correctness of information in this document.
satelettronica

V.A.G 1551 print-out	Possible causes of fault	Possible effects	Fault remedy
00525 Lambda probe -G39 Short to positive	- Wiring has short to positive - G39 defective	- No Lambda control	- Check Lambda probe and Lambda control =>Page 36
Signal too large	- G39 defective		
Signal too small	- G39 defective - Wiring has short to earth		

V.A.G 1551 print-out	Possible causes of fault	Possible effects	Fault remedy
00529 Rpm information missing No signal	- Hall sender (G40) in distributor defective - Wiring open circuit - Wiring has short to positive - Wiring has short to earth	- Engine does not start	- Check G40 => Page 76
00530 Throttle valve positioner/potentiometer -G881) Open circuit/short to positive	- Wiring open circuit or short to positive - G88 defective	- Cold starting problems - Idling speed not within tolerances	- Check G88 =>Page 41 , check throttle valve control part
Short to earth	- Wiring has short to earth - G88 defective	- Cold idling speed problems - Rough idling	

1) The throttle valve positioner/potentiometer (G88) is a component of the throttle valve control part (J338).

=> Current flow diagrams, Electrical fault finding and Fitting locations binder

V.A.G 1551 print-out	Possible causes of fault	Possible effects	Fault remedy
00532 Supply voltage Signal too large	- Battery voltage above 16.3 V	- No idling speed adaption	- Check alternator
00545 Engine/gearbox electrical connection Signal too large	- Fault on automatic gearbox - Wiring to automatic gearbox has short to earth	- Hard gear changes	- Check wiring to automatic gearbox: => Current flow diagrams, Electrical fault finding and Fitting locations binder Interrogate fault memory of automatic gearbox: => Automatic gearbox 001; Self-diagnosis; Interrogate fault memory

V.A.G 1551 print-out	Possible causes of fault	Possible effects	Fault remedy
00609 Ignition output 1			

satelettronica

V.A.G 1551 print-out	Possible causes of fault	Possible effects	Fault remedy
Short to positive	- Wiring to ignition transformer has short to positive	- Engine does not start	- Check ignition transformer output stage =>Page 77
Open circuit/short to earth	- Wiring open circuit in earth wire - Wiring has short to earth		
00638 Engine/gearbox electrical connection 2 Short to positive	- Wiring has short to positive	- Hard gear changes	- Check wiring to automatic gearbox: => Current flow diagrams, Electrical fault finding and Fitting locations binder - Interrogate automatic gearbox fault memory: => Automatic gearbox 001; Self-diagnosis; Interrogate fault memory
Open circuit/short to earth	- Wiring open/short to negative		

V.A.G 1551 print-out	Possible causes of fault	Possible effects	Fault remedy
00653 Gearbox selector lever plausibility Implausible signal	- Fault from automatic gearbox - Wiring to selector lever switch defective	- Increased idling speed	- Check wiring to selector lever switch: => Current flow diagrams, Electrical fault finding and Fitting locations binder Interrogate automatic gearbox fault memory: => Automatic gearbox 001; Self-diagnosis; Interrogating fault memory
01087 Basic setting not carried out	The throttle valve control part learning sequence has not been completed	---	- Carry out basic setting =>Page 35

V.A.G 1551 print-out	Possible causes of fault	Possible effects	Fault remedy
01126 Engine speed signal Short to positive	- Wiring open circuit or short to positive	- Rev. counter does not operate	- Check speed signal => Page 10 , final control diagnosis
Short to earth	- Wiring has short to earth		
01247 Activated charcoal filter solenoid valve 1 -N80 Open circuit/short to earth	- Wiring open circuit or short to earth - N80 defective	- Rough idling - Fuel odours	- Check N80 => Page 10 , final control diagnosis

Copyright by Volkswagen AG. Volkswagen AG does not guarantee or accept any liability with respect to the correctness of information in this document. Copyright by Volkswagen AG. Copying for private or commercial purposes, in part or in whole, is not permitted unless authorised by Volkswagen AG.
satelettronica

V.A.G 1551 print-out	Possible causes of fault	Possible effects	Fault remedy
Short to positive	- Wiring has short to positive - N80 defective		

V.A.G 1551 print-out	Possible causes of fault	Possible effects	Fault remedy
01249 No.1 cyl. injector -N30 Short to positive	- N30 defective - Wiring has short to positive	- Increased emissions values - Poor starting problems - Driving characteristics faults - Poor throttle response - Rough idling	- Check N30...N33 => Page 60 , checking injectors
Open circuit/short to earth	- N30 defective - Wiring open circuit in earth wire - Short to earth		
01250 No. 2 cyl. injector -N31 Short to positive Open circuit/short to earth	See fault code 01249, Cyl. 1		
Output on V.A.G 1551 printer	**Possible causes of fault**	**Possible effects**	**Fault remedy**
01251 No. 3 cyl. injector -N32 Short to positive Open circuit/short to earth	See fault code 01249, Cyl. 1		
01252 No. 4 cyl. injector -N33 Short to positive Open circuit/short to earth	See fault code 01249, Cyl. 1		
Output on V.A.G 1551 printer	**Possible causes of fault**	**Possible effects**	**Fault remedy**
01259 Fuel pump relay -J17 Short to positive	- J17 defective - Wiring has short to positive	- Engine does not start	- Check J17 => Page 10 , final control diagnosis
Open circuit/short to earth	- J17 defective - Wiring open circuit in earth cable - Short to earth		
17978 Engine control unit blocked	- Attempted manipulation - Short in communication cable - Incorrect coding - Immobilizer control unit defective/missing	- Engine starts briefly and then stops again	- Adapt engine control unit to electronic immobilizer => Page 58 Check electronic immobilizer: => Repair group 96; Servicing electronic immobilizer
Output on V.A.G 1551 printer	**Possible causes of fault**	**Possible effects**	**Fault remedy**
65535			

Protected by copyright. Copying for private or commercial purposes, in part or in whole, is not permitted unless authorised by Volkswagen AG. Copyright by Volkswagen AG. Volkswagen AG does not guarantee or accept any liability with respect to the correctness of information in this document.
satelettronica

V.A.G 1551 print-out	Possible causes of fault	Possible effects	Fault remedy
Control unit defective	- Engine control unit internally defective	- Driving characteristics faults - Engine stopped	- Renew J382 if necessary, => Page 26 , item 30

1.7 - Final control diagnosis

The final control diagnosis activates the following components in the stated sequence:

1. Throttle valve positioner (V60)

2. Activated charcoal filter solenoid valve 1 (N80)

3. Engine speed signal

4. Fuel pump relay (J17)

5. Engine/air conditioner compressor electrical connection

Special tools, testers, measuring instruments and auxiliary items required

- Fault reader V.A.G 1551 or vehicle system tester V.A.G 1552 with cable V.A.G 1551/3
- Test box V.A.G 1598/18
- Hand multimeter V.A.G 1526 or multimeter V.A.G 1715
- Diode test lamp V.A.G 1527
- Adapter set V.A.G 1594
- Current flow diagram

Check conditions

- Throttle valve potentiometer (G69) OK.
- Fuses 15, 18 and 21 OK.

Test requirements for vehicles with air conditioning system

- Vehicle at room temperature (warmer than + 15 °C)
- Air conditioning system switched on
- Select lowest temperature and highest blower speed

Notes:

If the final control diagnosis is to be repeated without the engine being started in between time, switch ignition off for approx. 20 seconds.

Work sequence

- Connect the fault reader V.A.G 1551 (V.A.G 1552). Then switch ignition on and select engine control unit with the "Address word" 01.
  (Connecting fault reader and selecting engine control unit => Page 2 .)

-> Indicated on display:

```
Rapid data transfer      HELP
Select function XX
```

- Operate fault reader taking into account the information on the display:
- Press keys 0 and 3 for the function "Final control diagnosis".

-> Indicated on display:

```
Rapid data transfer      Q
03 Final control diagnosis
```

Protected by copyright. Copying for private or commercial purposes, in part or in whole, is not permitted unless authorised by Volkswagen AG. Volkswagen AG does not guarantee or accept any liability with respect to the correctness of information in this document. Copyright by Volkswagen AG.
satelettronica

Activate throttle valve positioner (V60):

- Confirm input with Q key.

-> Indicated on display:

```
Final control diagnosis
Throttle valve positioner-V60
```

The throttle valve positioner must open and close the throttle valve until switching to the next final control by pressing the ⇒key.

If the throttle valve positioner does not move:

- Check throttle valve positioner
  =>Page 41 , checking throttle valve control part

Activate solenoid valve 1 for activated charcoal filter (N80):

- Press ⇒key.

-> Indicated on display:

```
Final control diagnosis
Activ. charcoal filter solenoid valve
1     -N80
```

The solenoid valve (right-hand suspension turret) must click, until activating the next final control element by pressing ⇒key.

- Pull hose off activated charcoal filter at solenoid valve.
- Connect an auxiliary hose to the vacant valve connection.
- Blow into auxiliary hose during final control diagnosis (in direction of throttle valve control part).
  Valve must open and close

If the solenoid valve does not click:

- Continue check => Page 12 .

Display engine speed signal:

Note:

The test is only possible for vehicles with a rev. counter. On vehicles without rev. counter switch to the next final control by pressing the ⇒ key.

- Press ⇒key.

-> Indicated on display:

```
Final control diagnosis
Engine speed signal
```

The rev. counter must display approx. 3000 rpm, until next final control element is activated by pressing the ⇒key.

If no display appears:

- Check the rev. counter.

=> Current flow diagrams, Electrical fault finding and Fitting locations, Fuel supply system

Actuate fuel pump relay (J17):

- Press ⇒key.

-> Indicated on display:

Copyright by Volkswagen AG. Volkswagen AG does not guarantee or accept any liability with respect to the correctness of information in this document. Copyright by Volkswagen AG. Protected by copyright. Copying for private or commercial purposes, in part or in whole, is not permitted unless authorised by Volkswagen AG.
satelettronica

```
Final control diagnosis
Fuel pump relay J17
```

The fuel pump relay (on the relay plate with fuse box, relay position 12) must click until switching to the next final control by pressing the ⇒key.

Note:

During the activation of the fuel pump relay the fuel pump must be heard to run at intervals.

If the relay does not click:

- Check fuel pump relay:

=> Current flow diagrams, Electrical fault finding and Fitting locations, Fuel supply system

Check electrical connection to air conditioner:

Note:

The test step is only for vehicles with air conditioner. On vehicles without air conditioner end final control diagnosis by pressing ⇒key.

-> Indicated on display:

```
Final control diagnosis
Engine/air cond. compr. electr.
connection
```

The air conditioner compressor magnetic coupling must click, until ending final control diagnosis by pressing ⇒key.

If the magnetic coupling does not click:

- Check air conditioner.

=> Heater, air conditioner

- Press ⇒key.

-> Indicated on display:

```
Rapid data transfer      HELP
Select function XX
```

- Press keys 0 and 6 for the function "End output" and confirm entry with the Q key.
- Switch off ignition.

Note:

After completion of the final control diagnosis switch off ignition. If the ignition is not switched off before attempting to start, the engine will not run, as the injectors and the ignition transformer will not be activated.

Continuation of check when the activated charcoal filter solenoid 1 does not click:

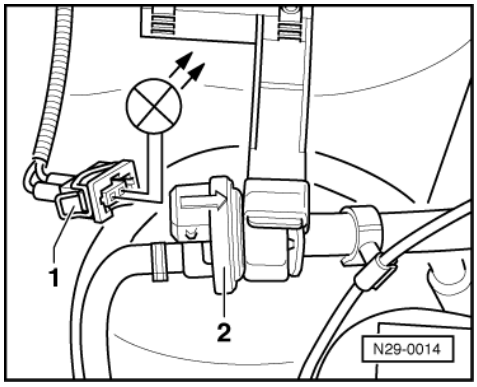

Protected by copyright. Copyright by Volkswagen AG.
Copying for private or commercial purposes, in part or in whole, is not permitted unless authorised by Volkswagen AG. Volkswagen AG does not guarantee or accept any liability with respect to the correctness of information in this document.
satelettronica

- -> Pull connector -1- off solenoid valve -2- and connect diode test lamp V.A.G 1527 with aux. cables from V.A.G 1594 to disconnected connector.
  The LED must flash (bright/darker)

LED flashes:

- Proceed with final control diagnosis until completed.
- Switch off ignition.
- Renew solenoid valve -2-.

=> Repair group 20; Removing and installing parts of activated charcoal filter system Removing and installing parts of activated charcoal filter system

LED does not flash:

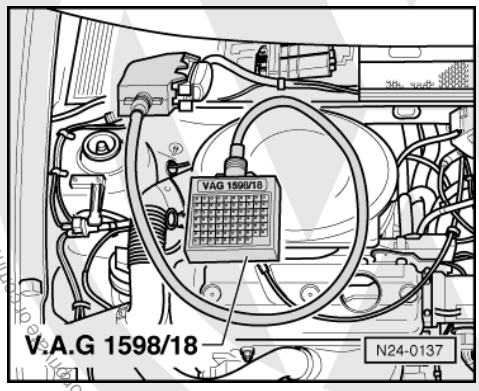

- Proceed with final control diagnosis until completed.
- Switch off ignition.
- -> Connect test box V.A.G 1598/18 to control unit wiring loom.
- Check wire for open circuit between test box sockets 3 and 2 pin connector contact 1, according to current flow diagram.
  Wire resistance: max. 1.5 ω
- Additionally check wire for short to battery positive and earth.
  Specification: ∞ω
- Check wire between 2 pin connector contact 2 and relay plate for open circuit using to current flow diagram.
  Wire resistance: max. 1.5 ω

If no wiring fault is detected:

- Renew engine control unit
  => Page 26 , item 30

1.8 - Read measured value block and basic settings

The measured values in the functions read measured value block and basic setting are described during the individual component test. This table serves only as an overview.

Note:

To change to another display group proceed as follows:

Display group	V.A.G 1551	V.A.G 1552
Higher	Press key 3	Press ↑key
Lower	Press key 1	Press ↓key
Skip	Press key C	Press key C

satelettronica

1.9 - Display group overview

Display group 0 (decimal displayed value)

Test conditions
- Engine runs at idling speed
- The coolant temperature is at least 80 °C
- The electrical consumers are switched off

Display zones		Specification	Corresponds to
1 2 3 4 5 6 7 8 9 10	Engine speed manual gearbox automatic gearbox	71...63 78...69	830...930 rpm1) 750...850 rpm1)
1 2 3 4 5 6 7 8 9	Injection period	4...10	2.05...5.12 ms
1 2 3 4 5 6 7 8	Throttle valve potentiometer voltage	24...50	4.53...4.02 V
1 2 3 4 5 6 7	Not relevant	---	---
1 2 3 4 5 6	Not relevant	---	---
1 2 3 4 5	Lambda probe signal	0...205	0...1.0 V
1 2 3 4	Intake manifold pressure	37...90	260...500 mbar
1 2 3	Coolant temperature	37...18	80...110 °C
1 2	Battery voltage	171...226	11.0...14.5 V
1	Intake air temperature	156...35	15...80 °C

1) Up-to-date specifications:

=> Exhaust emissions test binder

	Display zones			
	1	2	3	4
Display group 1				
Display	xxxxrpm	xx.x °C	x.x V	xxxxxxxx
Indicated	Engine speed	Coolant temperature	Lambda probe voltage	Adjustment conditions4)
Specification1)	Manual gearbox: 830...9303) Automatic gearbox: 750...8502)3)	80...110	0...1.0 fluctuating	00000000
Display group 2				
Display	xxxx rpm	xx.xx ms	xx.x V	xx.x °C
Indicated	Engine speed	Injection period	Battery voltage	Intake air temperature
Specification1)	Manual gearbox: 830...9303) Automatic gearbox: 750...8502)3)	2.05...5.12	11.0...14.5 V	15...80

	Display zones			
	1	2	3	4
Display group 3				
Display	xxxx rpm	xxx %	xx <°	xx.x %
Indicated	Engine speed	Engine load	Throttle valve angle	Position of throttle valve by throttle valve positioner

Copyright by Volkswagen AG. Volkswagen AG does not guarantee or accept any liability with respect to the correctness of information in this document. Copyright by Volkswagen AG. Provided by copyright. Copying for private or commercial purposes, in part or in whole, is not permitted unless authorized by Volkswagen AG.
satelettronica

	Display zones			
Specification1)	Manual gearbox: 830...9303) Automatic gearbox: 750...8502)3)	Manual gearbox: 18...28 Automatic gearbox: 18...29	9...20	Manual gearbox: 17...33 Automatic gearbox: 17...34

1) The specifications must be attained when:

- engine runs at idling speed,

- the coolant temperature is at least 80 °C and

- electrical consumers are switched off

2) The control unit increases idling speed under following conditions:

- When the battery voltage is too low: up to 900 rpm

- After a long full throttle drive and at higher temperatures: up to 960 rpm

- When air conditioner is switched on: to approx. 900 rpm

3) Up-to-date specifications:

=> Exhaust emissions test binder

4) Significance of numbers in 8 digit number block => Page 16 .

	Display zones			
	1	2	3	4
Display group 4				
Display	xxxx rpm	xxx %	xxx	xxxxxxxx
Indicated	Engine speed	Engine load	Speed signal	Operating condition4)
Specification1)	Manual gearbox: 830...9303) Automatic gearbox: 750...8502)3)	Manual gearbox: 18...28 Automatic gearbox: 18...29	255	01000000
Display group 5				
Display	xxxx rpm	xxx %		
Indicated	Engine speed	Duty cycle solenoid valve 1 for activated charcoal filter	---	---
Specification1)	Manual gearbox: 830...9303) Automatic gearbox: 750...8502)3)	6...19	---	---

	Display zones			
	1	2	3	4
Display group 6				
Display	xxx	xxx	xxx	xxx
Indicated	Mixture correction value	Learning value for mixture correction	Learning value for idling stabilization by throttle valve positioner	The stored value of "Basic setting" for throttle valve potentiometer position: Throttle valve closed

Protected by copyright. Copying for private or commercial purposes, in part or in whole, is not permitted unless authorised by Volkswagen AG. Volkswagen AG does not guarantee or accept any liability with respect to the correctness of information in this document. Copyright by Volkswagen AG.
satelettronica

	Display zones			
Specification	Fluctuating around 128 Tolerance range 85...160	Not for service	Not for service	20...30

1) The specifications must be attained when:

- engine runs at idling speed,

- the coolant temperature is at least 80 °C and

- electrical consumers are switched off

2) The control unit increases idling speed under following conditions:

- When the battery voltage is too low: up to 900 rpm

- After a long full throttle drive and at higher temperatures: up to 960 rpm

- When air conditioner is switched on: to approx. 900 rpm

3) Up-to-date specifications:

=> Exhaust emissions test binder

4) Significance of numbers in 8 digit number block => Page 16 .

Significance of figures in 8 digit number block

Significance when displayed digit = 1									
x	x	x	x	x	x	x	x	Adjustment conditions (display group 1)	Operating condition (display group 4)
1								Not relevant	Overrun
	1							Automatic gearbox retards ignition timing for gear change	Idling speed
		1						Air conditioner compressor switched on	Part load
			1					Idling switch open1)	Full load
				1				Fault in the Lambda control2)	Not relevant
					1			Throttle valve opened	Not relevant
						1		Speed above 2000 rpm	Not relevant
							1	Coolant temperature below 80 °C	Not relevant

1) The problem may be: e.g. the accelerator cable is set too tight.

2) Self-diagnosis will not register all faults. If a 1 is displayed even when no faults are stored, check Lambda probe and Lambda control =>Page 36 .

Protected by copyright. Copyright by Volkswagen AG. Volkswagen AG does not guarantee or accept any liability with respect to the correctness of information in this document. Copyright by Volkswagen AG. Reproduction, in whole or in part, for commercial purposes, is not permitted unless authorised by Volkswagen AG.
satelettronica

24 - Mixture preparation, Injection

1 - Servicing injection system

1.1 - Servicing injection system

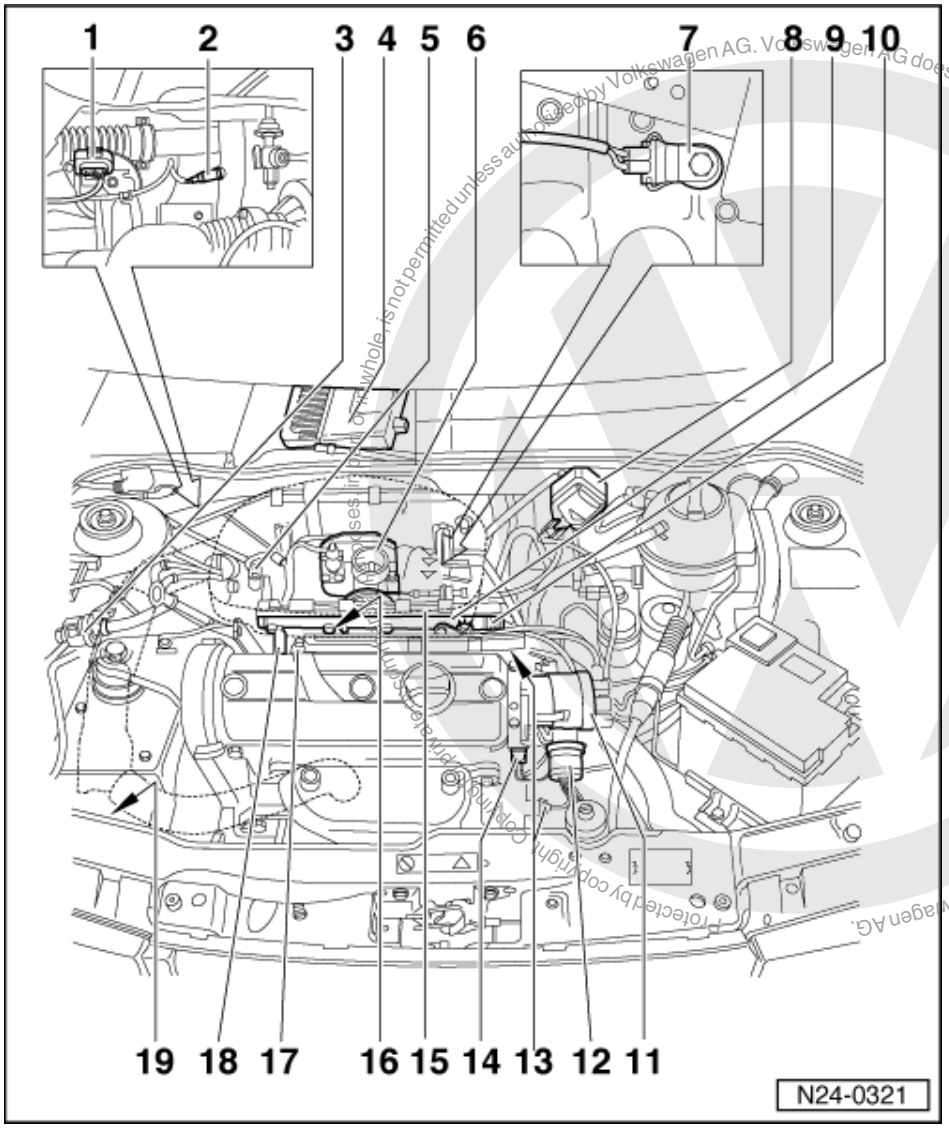

1.2 - Fitting locations overview

1 4 pin connector
- For Lambda probe (G39)

2 Lambda probe (G39), 55 Nm
- Location: In front exhaust pipe

3 Activated charcoal filter solenoid valve 1 (N80)
- Activated charcoal filter system

satelettronica

=> Repair group 20, removing and installing parts of the fuel supply system, removing and installing parts of the activated charcoal filter system

4 Engine control unit
(control unit for 1AV fuel injection and ignition system -J382)

5 Intake manifold pressure sender (G71) with intake air temperature sender (G42)

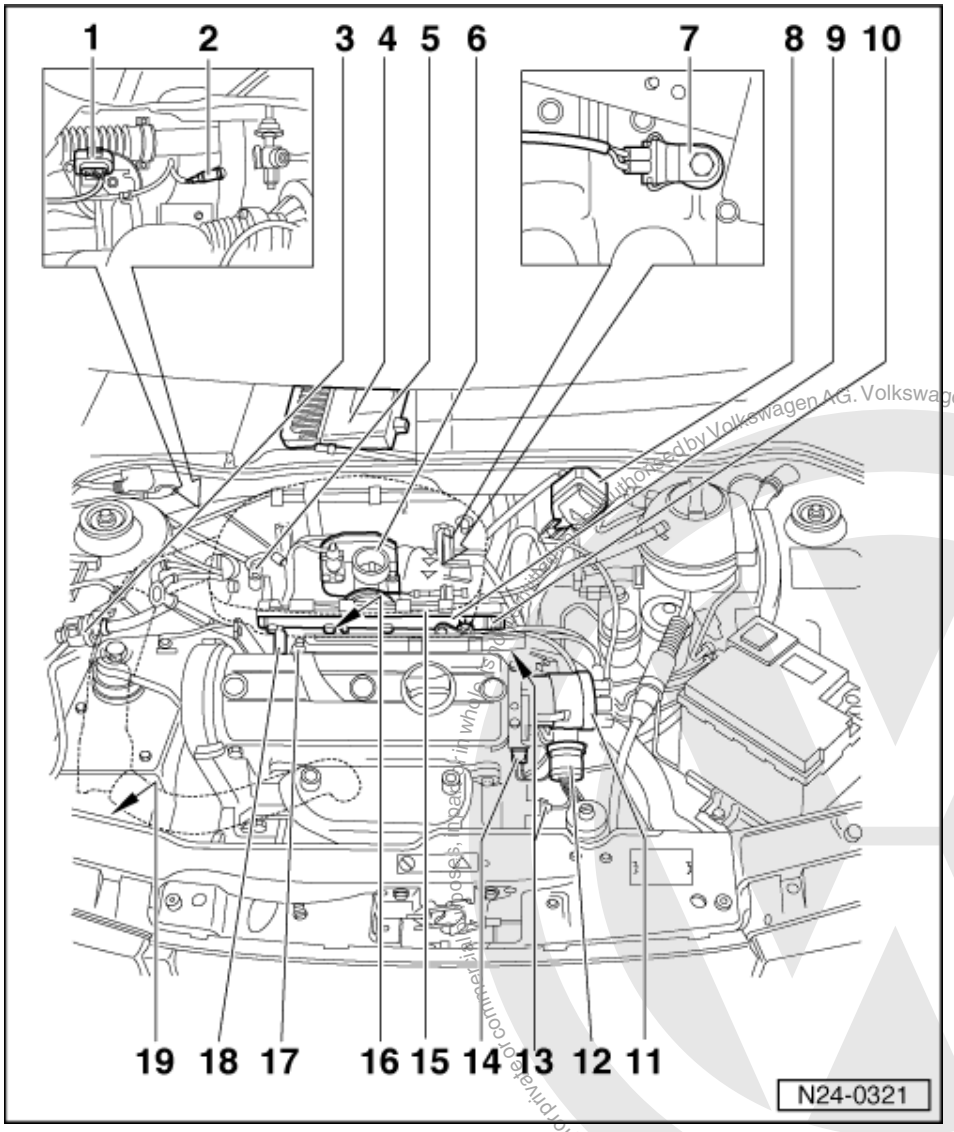

6 Throttle valve control part (J338)

7 Knock sensor 1 (G61)
- =>Page 72

8 Ignition transformer (N152)
- =>Page 70

9 Fuel rail

10 Fuel pressure regulator

11 Distributor
- =>Page 71

12 Central connector

13 Earth connection

14 Coolant temperature sender (G62)
- Identification: yellow ring

15 Air cleaner
- Removing => Page 33 ,

Protected by copyright. Copying for private or commercial purposes, in part or in whole, is not permitted unless authorised by Volkswagen AG. Volkswagen AG does not guarantee or accept any liability with respect to the correctness of information in this document. Copyright by Volkswagen AG.
satelettronica

Fig. 3

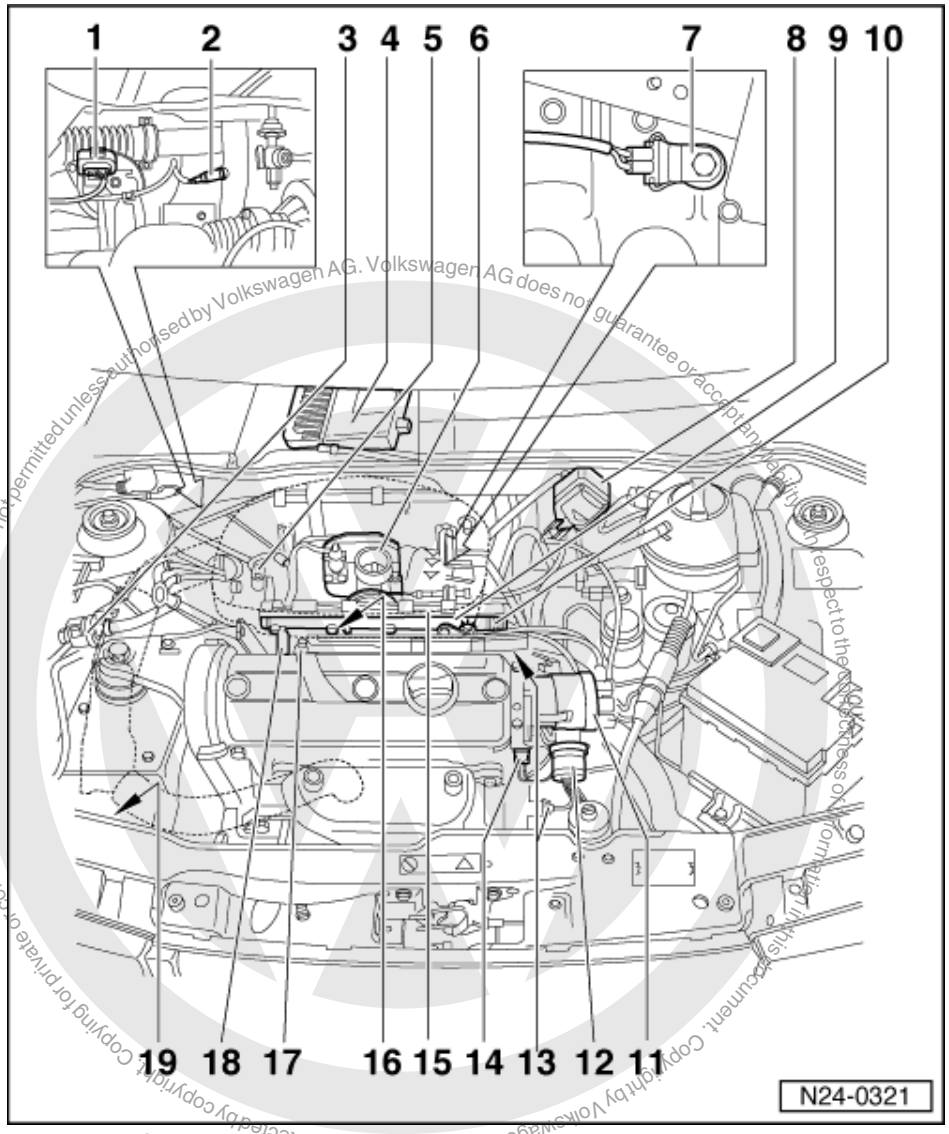

Protected by copyright. Copying for private or commercial purposes, in part or in whole, is not permitted unless authorised by Volkswagen AG. Volkswagen AG does not guarantee or accept any liability with respect to the correctness of information in this document. Copyright by Volkswagen AG.

16 Injector (N30...N33)

17 Spark plug, 25 Nm

- =>Page 74

18 Oil pressure switch

19 Activated charcoal filter

- In right-hand wheel housing
- Activated charcoal filter system

=> Repair group 20, removing and installing parts of the fuel supply system, removing and installing parts of the activated charcoal filter system

1.3 - General notes on injection

Servicing ignition part:

=> Repair group 28

satelettronica

Notes:

- The engine control unit is equipped with self-diagnosis. Before carrying out repairs and fault finding the fault memory must be interrogated. Also the vacuum hoses and connections must be checked (unmetered air).
- Components marked with * are checked via the self diagnosis
  => Page 3 , interrogating and erasing fault memory.
- Components marked with **can be checked with the final control diagnosis => Page 10 .
- Disconnecting and connecting the battery must only be done with the ignition switched off, otherwise the engine control unit could be damaged.
- For trouble-free operation of the electrical components a voltage of at least 11.5 V is necessary.
- If the engine starts, runs for a short period and then stops, after fault finding, repairs or component tests, then the fault may lie with the immobilizer which is blocking the engine control unit. The fault memory must be interrogated and if necessary the control unit matched => Page 58 .
- Do not use sealants containing silicone. Particles of silicone drawn into the engine, will not be burnt in the engine and damage the Lambda probe.
- During some checks it is possible that the control unit will recognise and store a fault. Therefore after completing all checks and repairs the fault memory must be interrogated and if necessary erased.
  => Page 3 , interrogating and erasing fault memory
- The "learnt" values will be erased if the control unit is disconnected from the current supply. Engine running problems may occur until the control unit has "relearnt" all values.
- Always renew spring-type hose clips with screw-type hose clips.

Safety precautions =>Page 34

Rules for cleanliness => Page 34

Technical data => Page 34

Checking intake system for leaks (unmetered air) => Page 65

Protected by copyright. Copying for private or commercial purposes, in part or in whole, is not permitted unless authorised by Volkswagen AG. Volkswagen AG does not guarantee or accept any liability with respect to the correctness of information in this document. Copyright by Volkswagen AG.
satelettronica

1.4 - Removing and installing parts of the injection system

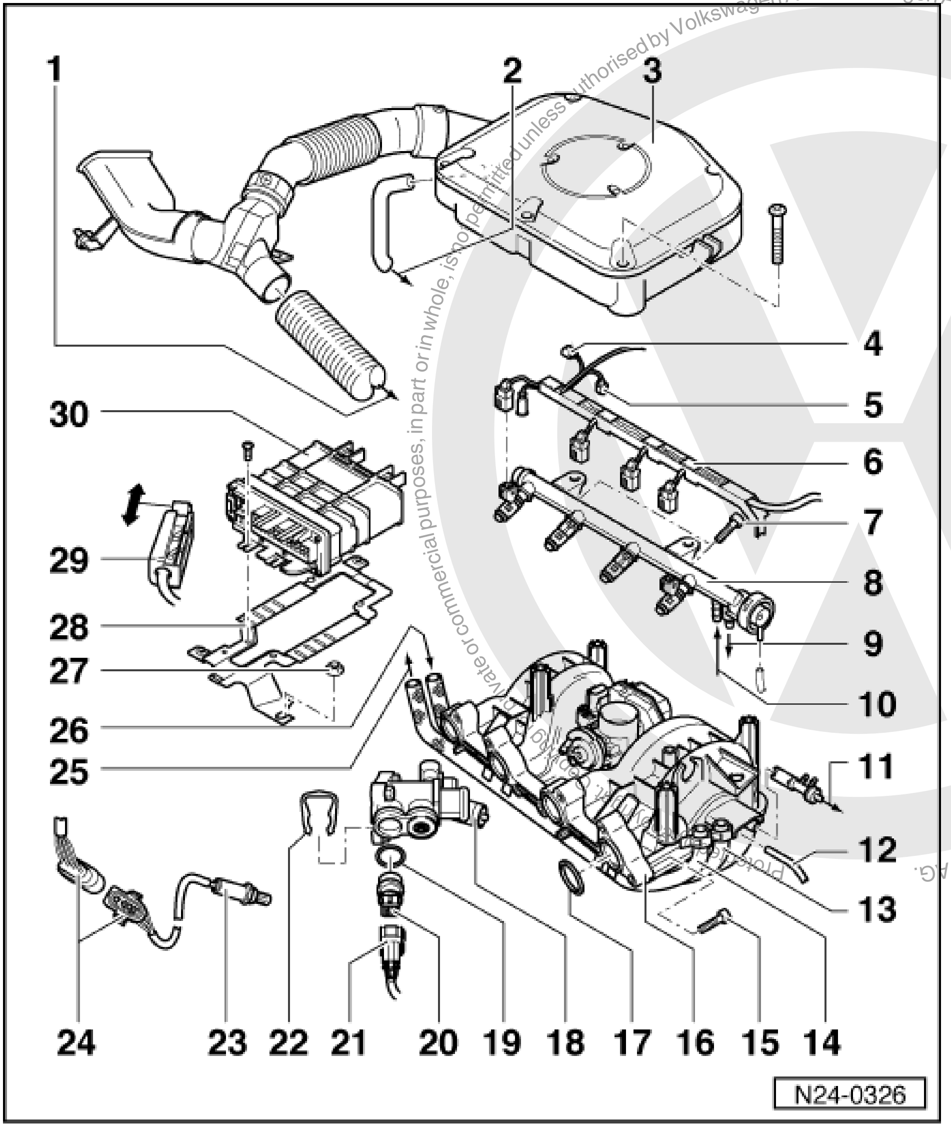

Protected by copyright. Copying for private or commercial purposes, in part or in whole, is not permitted unless authorised by Volkswagen AG. Volkswagen AG does not guarantee or accept any liability with respect to the correctness of information in this document. Copyright by Volkswagen AG.

satelettronica

1 To warm air intake
- To warm air collecting plate on exhaust manifold

2 To oil separator

3 Air cleaner
- Removing => Page 33 , Fig. 3
- Dismantling and assembling => Page 31

4 Connector
- 4-pin
- For intake manifold pressure sender (G71) with intake air temperature sender (G42)

5 Connector
- 8 pin
- For throttle valve control part (J338)

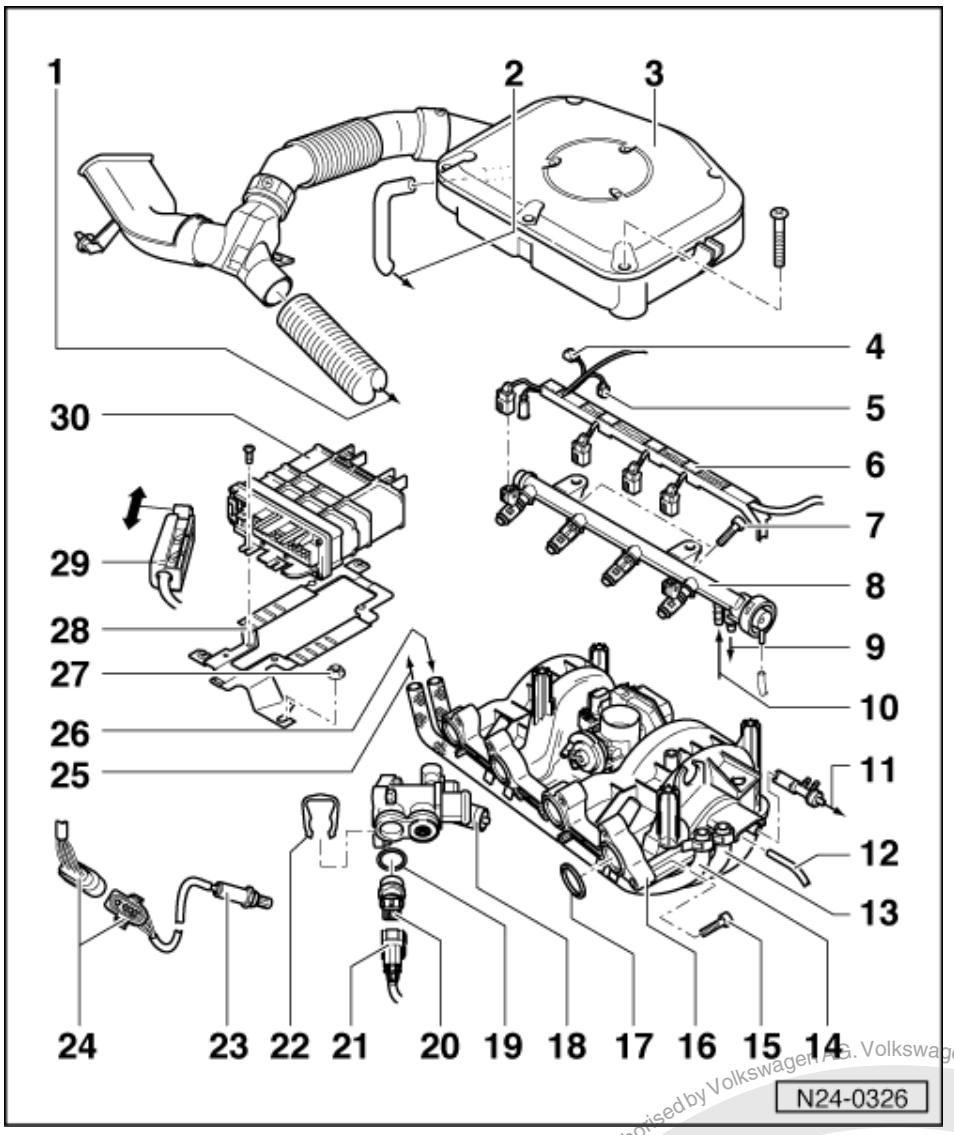

6 Cable guide
- Clipped on fuel manifold

7 10 Nm

8 Fuel manifold with injectors
- Dismantling and assembling => Page 27

9 Return hose connection

10 Supply hose connection

11 To brake servo

12 Vacuum hose

13 Supply hose
- Secure with spring-type clips on fuel manifold
- Black or white markings

Protected by copyright. Copying for private or commercial purposes, in part or in whole, is not permitted unless authorised by Volkswagen AG. Volkswagen AG does not guarantee or accept any liability with respect to the correctness of information in this document. Copyright by Volkswagen AG.
satelettronica

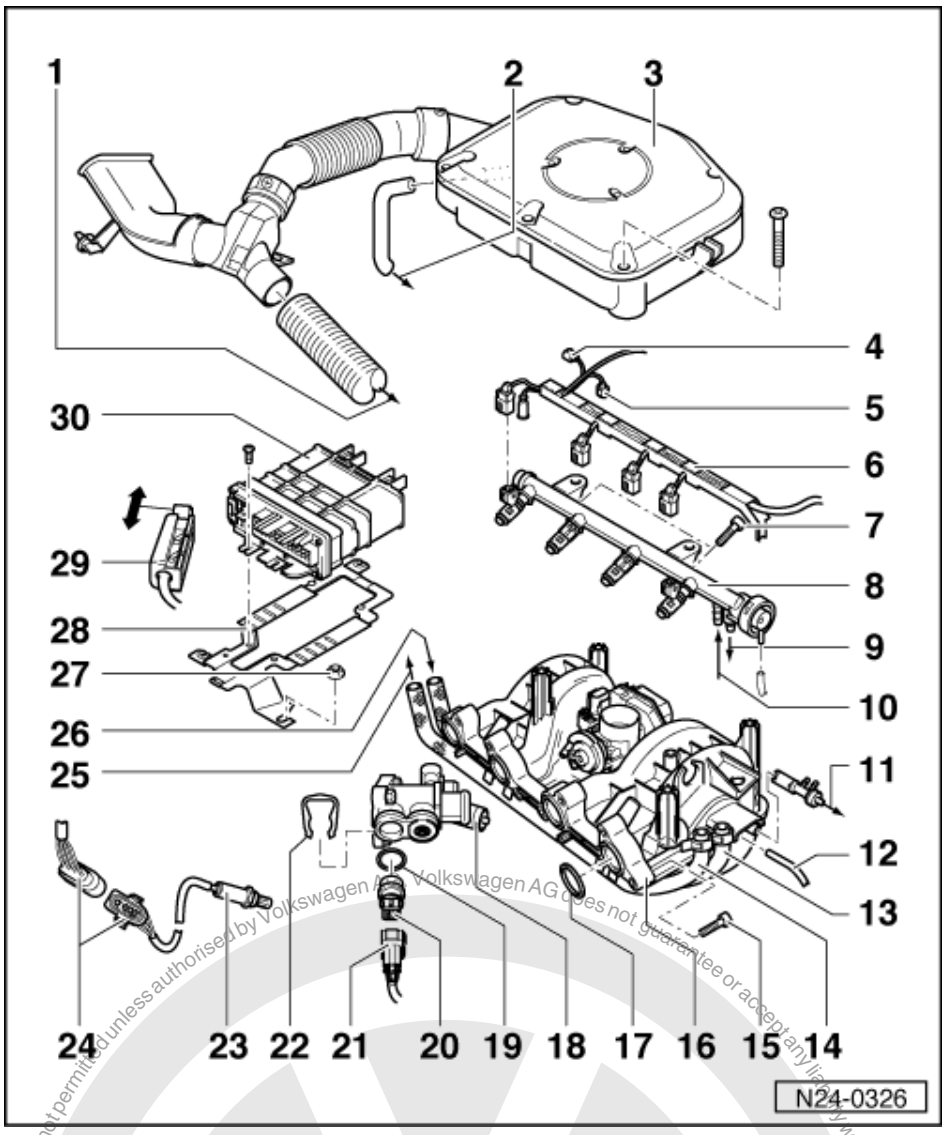

14 Return hose
- Secure with spring-type clips on fuel manifold
- Blue or blue markings

15 20+1 Nm
- Tighten bolts from inside to outside
- Ensure tightening torque is correct, otherwise the intake manifold bushes will work into the cylinder head

16 Intake manifold
- Dismantling and assembling => Page 28

17 O ring
- Renew

18 Thermostat housing

19 O ring
- Renew if damaged

satelettronica
Protected by copyright. Copying for private or commercial purposes, in part or in whole, is not permitted unless authorised by Volkswagen AG. Volkswagen AG does not guarantee or accept any liability with respect to the correctness of information in this document. Copyright by Volkswagen AG.

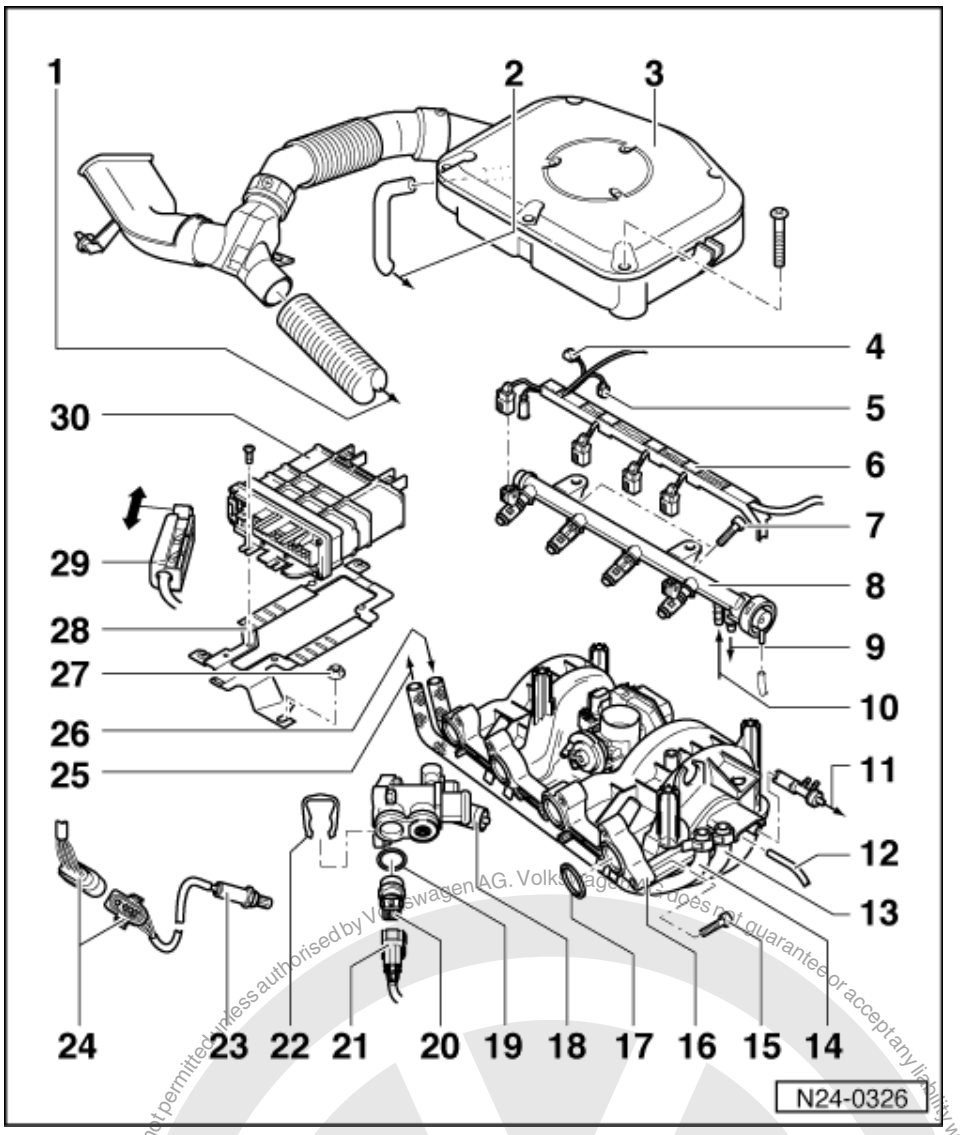

20 Coolant temperature sender (G62)*

- With coolant temperature gauge sender (G2)
- Identification: yellow ring
- If necessary before removing, release pressure from cooling system
- Checking =>Page 51
- Resistance graph
  =>Page 33 , Fig. 1

21 Connector

22 Retaining clip

23 Lambda probe (G39)*, 55 Nm

- Location: In front exhaust pipe
- Only grease threads with "G5"; "G5" must not get into the slots on the probe body
- Checking Lambda probe and Lambda control
  => Page 36
- Checking probe heating voltage supply => Page 38

Protected by copyright. Copying for private or commercial purposes, in part or in whole, is not permitted unless authorised by Volkswagen AG. Volkswagen AG does not guarantee or accept any liability with respect to the correctness of information in this document. Copyright by Volkswagen AG.
satelettronica

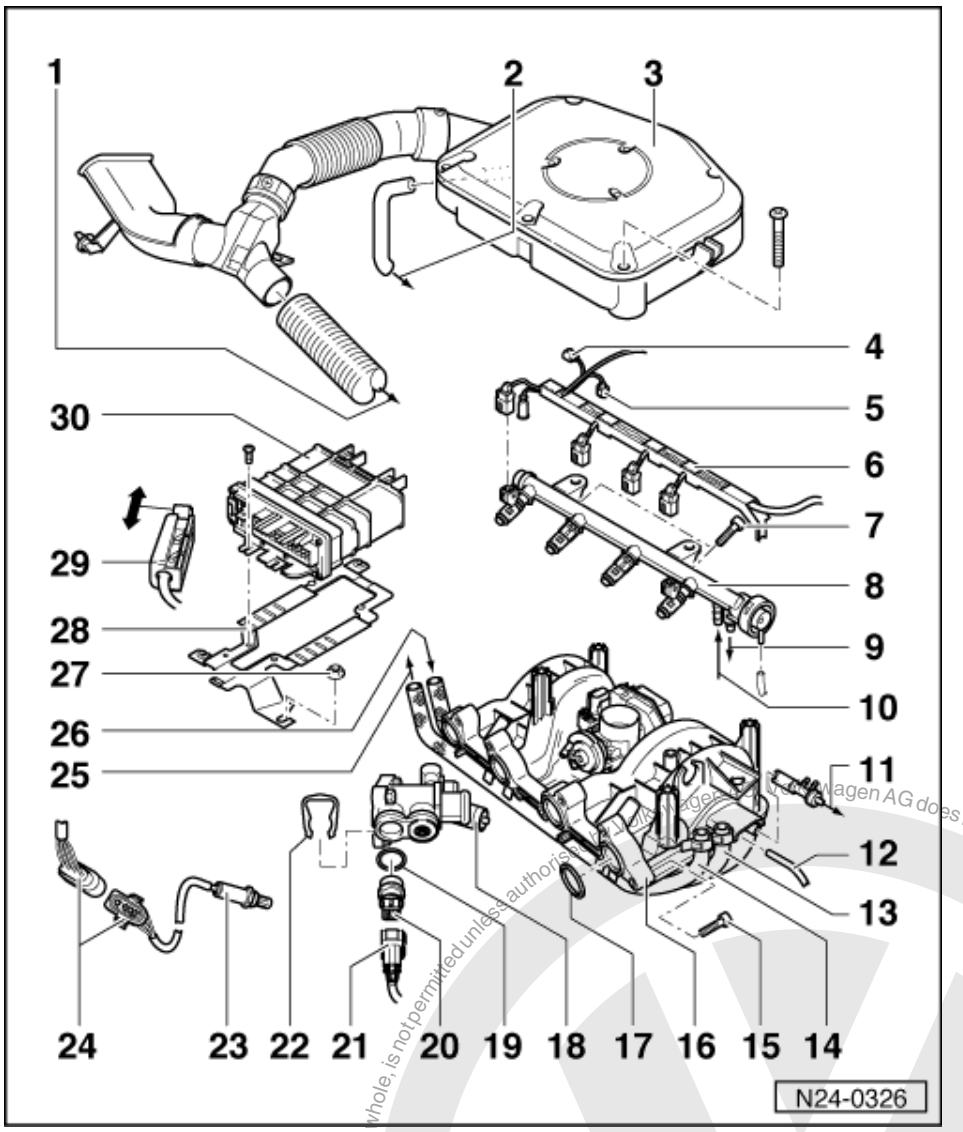

- Check probe heating for continuity

24 4 pin connector
- For Lambda probe and Lambda probe heating

25 To fuel tank

26 From fuel supply unit in fuel tank

27 10 Nm

28 Securing plate

29 Connector
- Only disconnect or connect with ignition switched off

satelettronica
Protected by copyright. Copying for private or commercial purposes, in part or in whole, is not permitted unless authorised by Volkswagen AG. Volkswagen AG does not guarantee or accept any liability with respect to the correctness of information in this document. Copyright by Volkswagen AG.

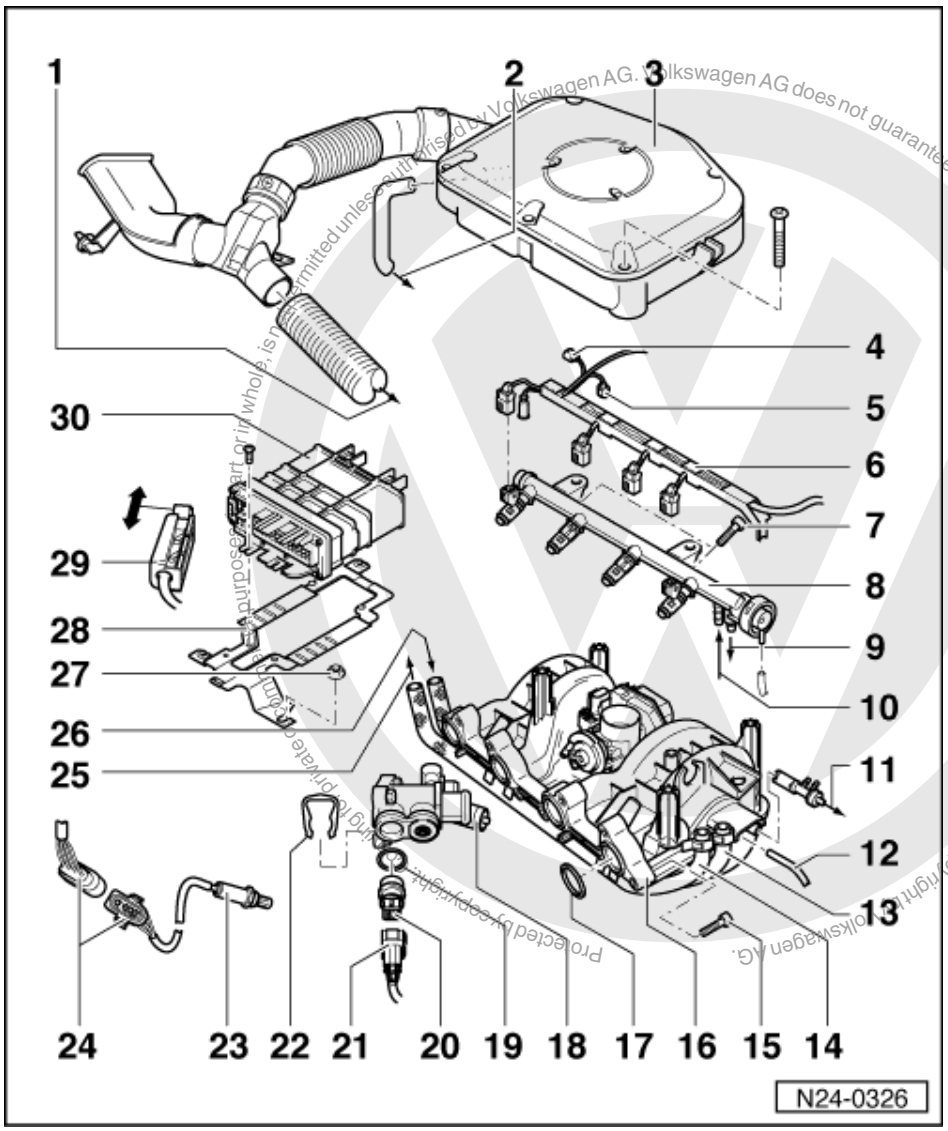

30 Engine control unit*

(control unit for 1AV fuel injection and ignition system -J382)

- For injection system, Lambda regulation, activated charcoal filter solenoid valve, knock control, governed speed, ignition and self-diagnosis
- Location: in plenum chamber, right
- Checking voltage supply => Page 56

If the control unit is replaced:

- Perform basic settings => Page 35
- Match control unit to electronic immobilizer => Page 58
- On vehicles with automatic gearbox: Match control unit to automatic gearbox

=> 4-speed automatic gearbox 001; self-diagnosis, electrical check; performing self-diagnosis; initiating basic setting

satelettronica

1.5 - Dismantling and assembling fuel manifold with injectors

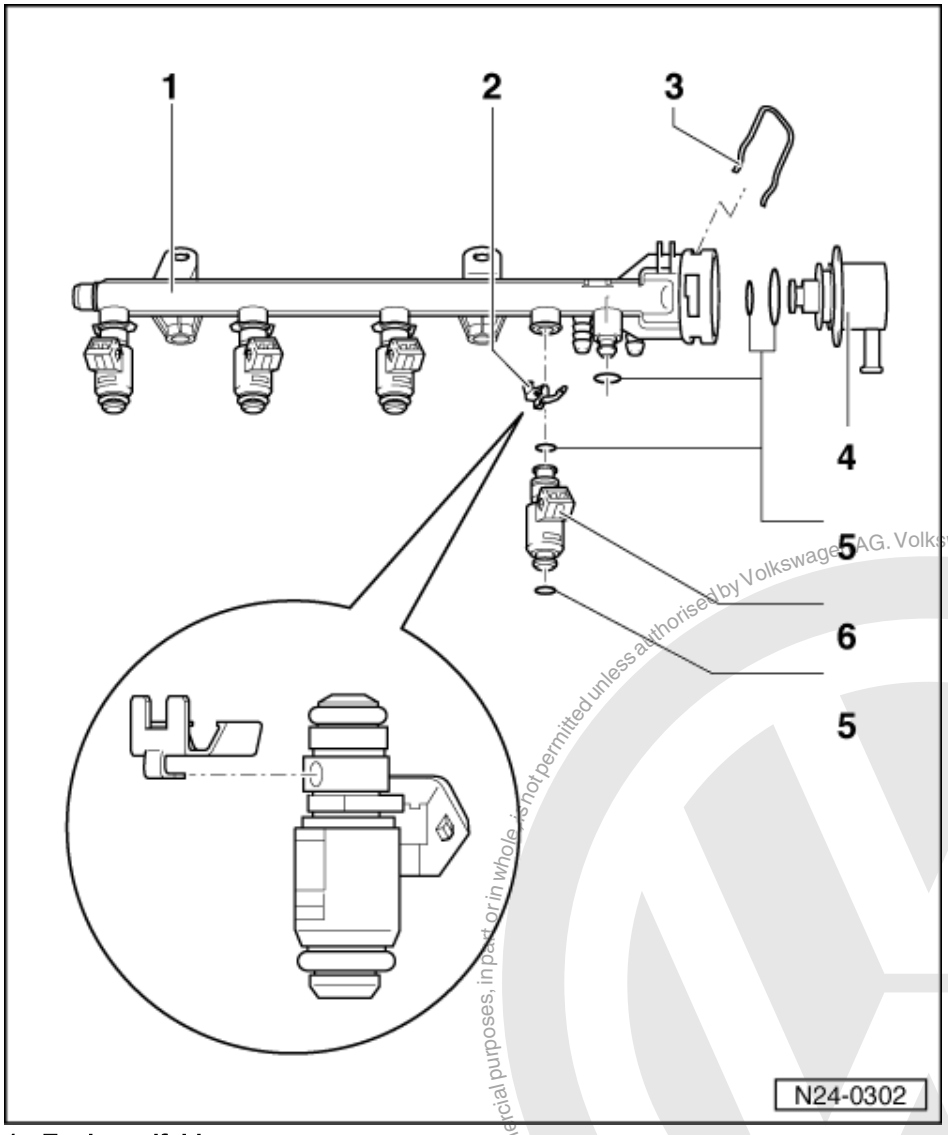

1 Fuel manifold

2 Retaining clip
- Ensure seated correctly at injector and fuel rail

3 Retaining clip

4 Fuel pressure regulator
- Checking fuel pressure regulator and holding pressure => Page 62

5 O ring
- Renew if damaged

6 Injectors (N30...N33)*
- Checking => Page 60
- Resistance 14...17 ω

Protected by copyright. Copying for private or commercial purposes, in part or in whole, is not permitted unless authorised by Volkswagen AG. Volkswagen AG does not guarantee or accept any liability with respect to the correctness of information in this document. Copyright by Volkswagen AG.
satelitronica

1.6 - Dismantling and assembling intake manifold

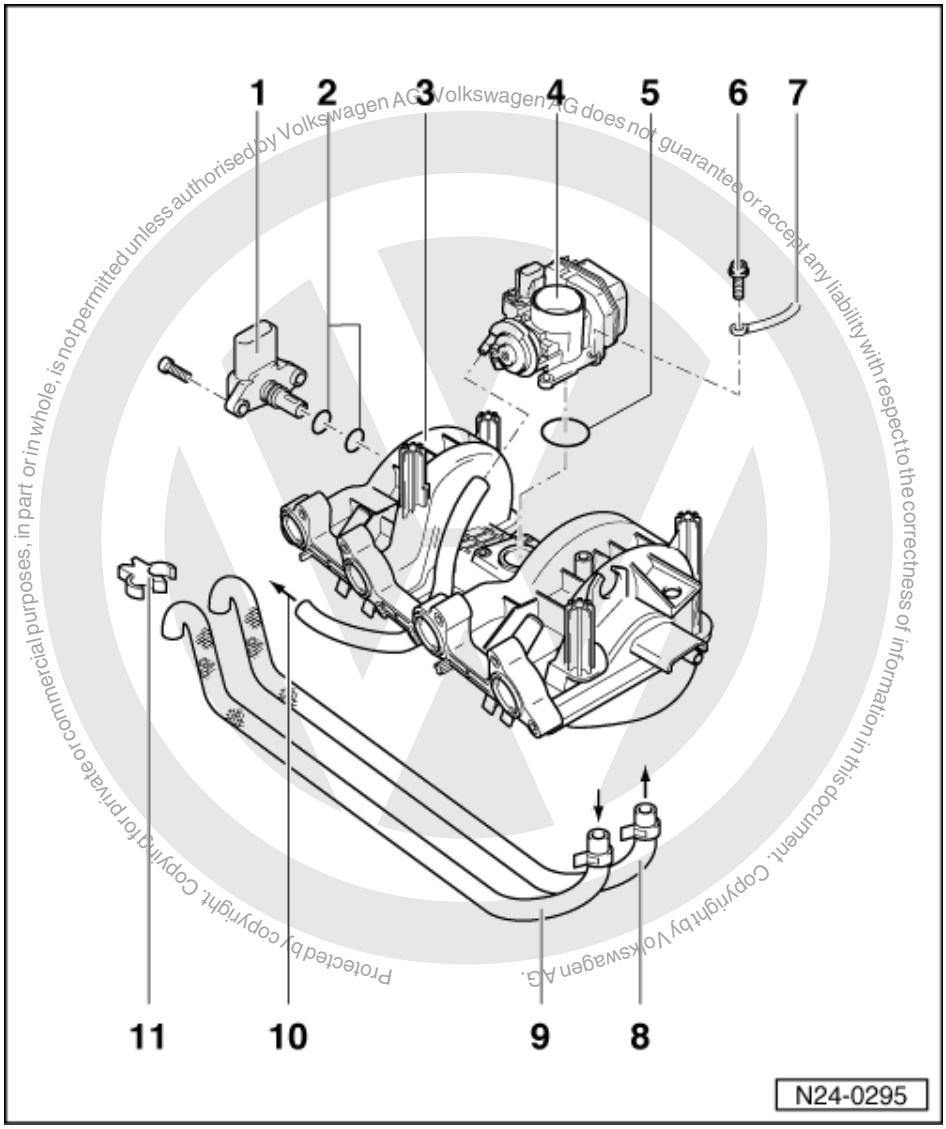

Protected by copyright. Copyright by Volkswagen AG.
Volkswagen AG does not guarantee or accept any liability with respect to the correctness of information in this document. Copyright by Volkswagen AG.
Protected by copyright. Copyright for private or commercial purposes, in part or in whole, is not permitted unless authorised by Volkswagen AG.

1 Intake manifold pressure sender (G71)* with intake air temperature sender (G42)*
- Resistance values for intake air temperature sender
  =>Page 33 , Fig. 2

2 O ring
- Renew if damaged

3 Intake manifold

4 Throttle valve control part (J338)*
- Checking => Page 41
- Components of the throttle valve control part (J338):
  Throttle valve positioner (V60), throttle valve potentiometer (G88), throttle valve potentiometer (G69) and idling switch (F60)

satelettronica

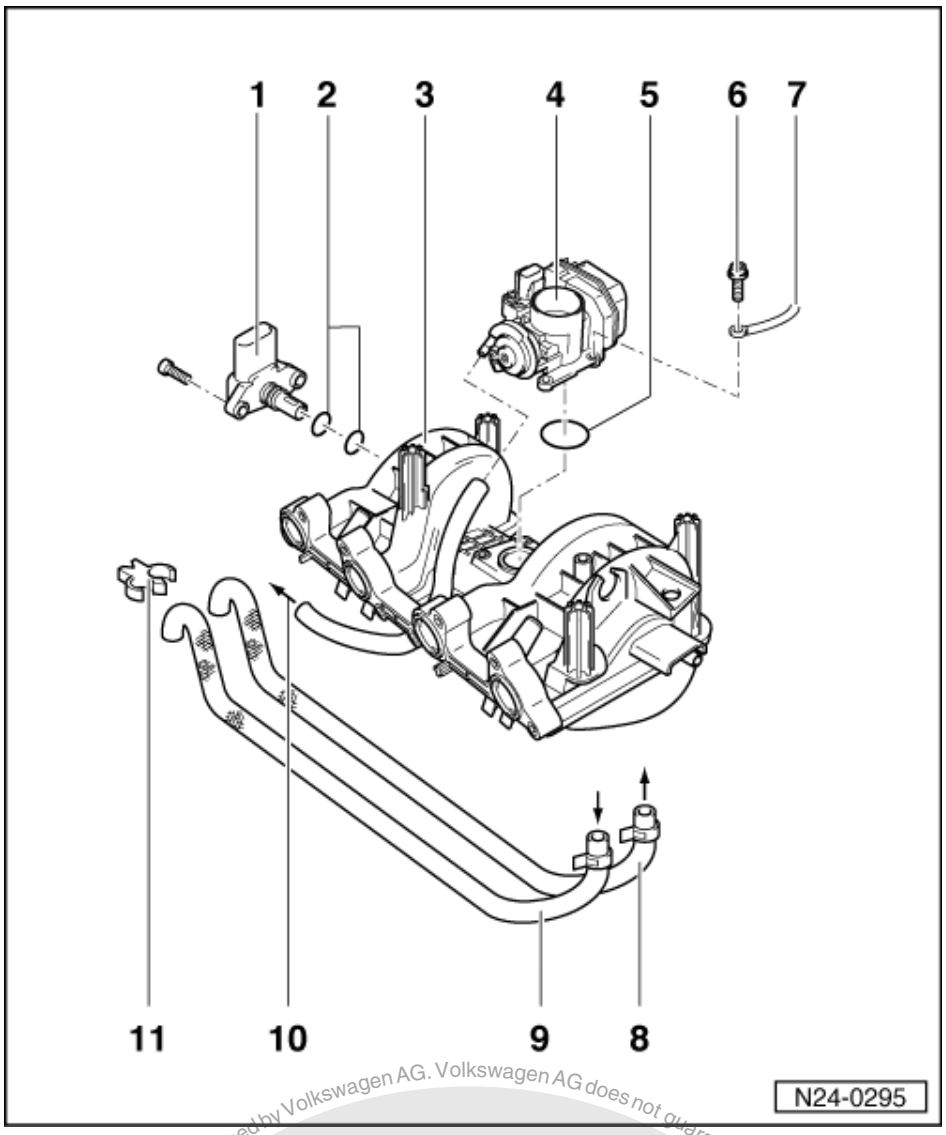

If the control unit is replaced:
- Perform basic settings => Page 35
- On vehicles with automatic gearbox: Match control unit to automatic gearbox

=> 4-speed automatic gearbox 001; self-diagnosis, electrical check; performing self-diagnosis; initiating basic setting

5 O ring
- Renew if damaged

6 10 Nm

7 Earth wire
- For throttle valve control part

8 Supply hose
- Clip in lower intake manifold

Protected by copyright. Copyright by Volkswagen AG. Volkswagen AG does not guarantee or accept any liability with respect to the correctness of information in this document. Copying for private or commercial purposes, in part or in whole, not permitted unless authorised by Volkswagen AG.

satelettronica

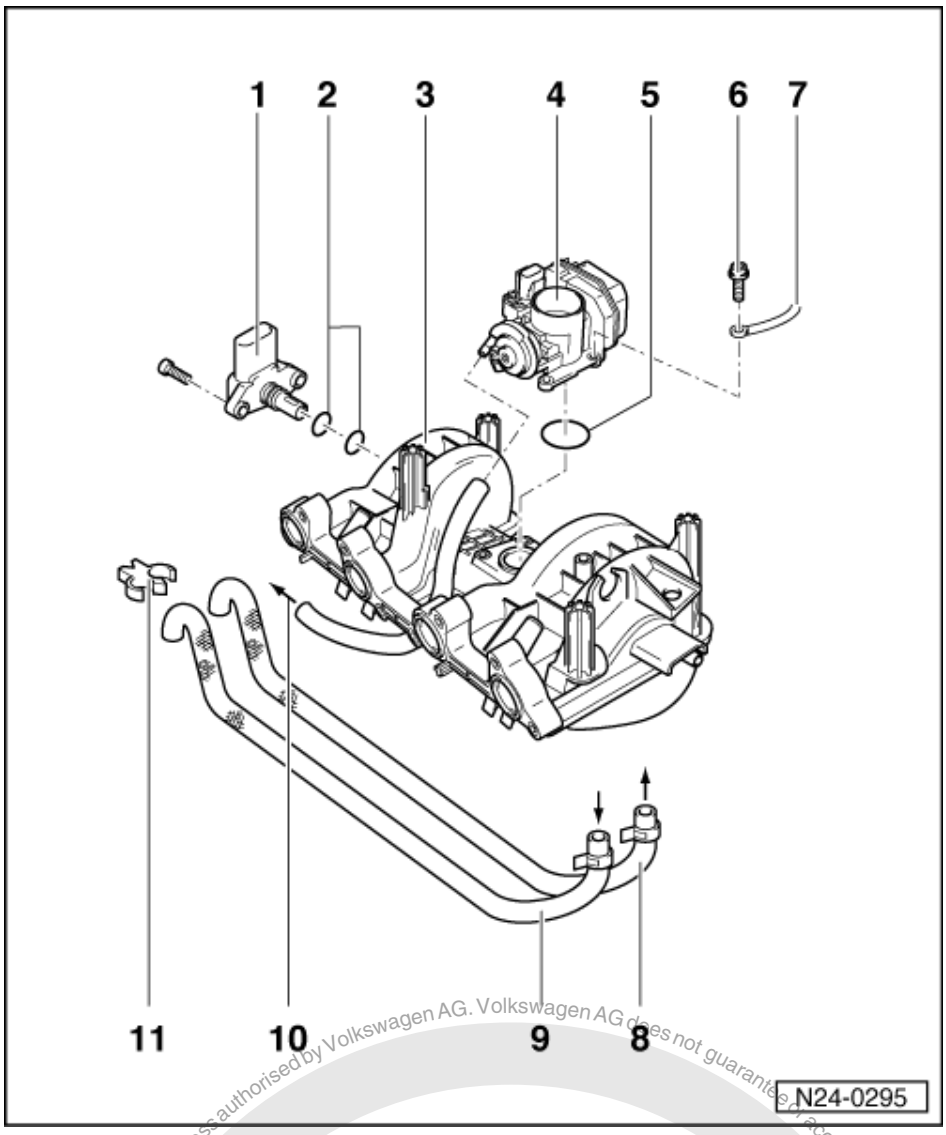

9 Return hose
- Clip in lower intake manifold

10 To activated charcoal filter solenoid valve 1 (N80)
- Activated charcoal filter system

=> Repair group 20, removing and installing parts of the fuel supply system, removing and installing parts of the activated charcoal filter system

11 Retaining clip

Protected by copyright. Copying for private or commercial purposes, in part or in whole, is not permitted unless authorised by Volkswagen AG. Volkswagen AG does not guarantee or accept any liability with respect to the correctness of information in this document. Copyright by Volkswagen AG.
satelettronica

1.7 - Dismantling and assembling air cleaner

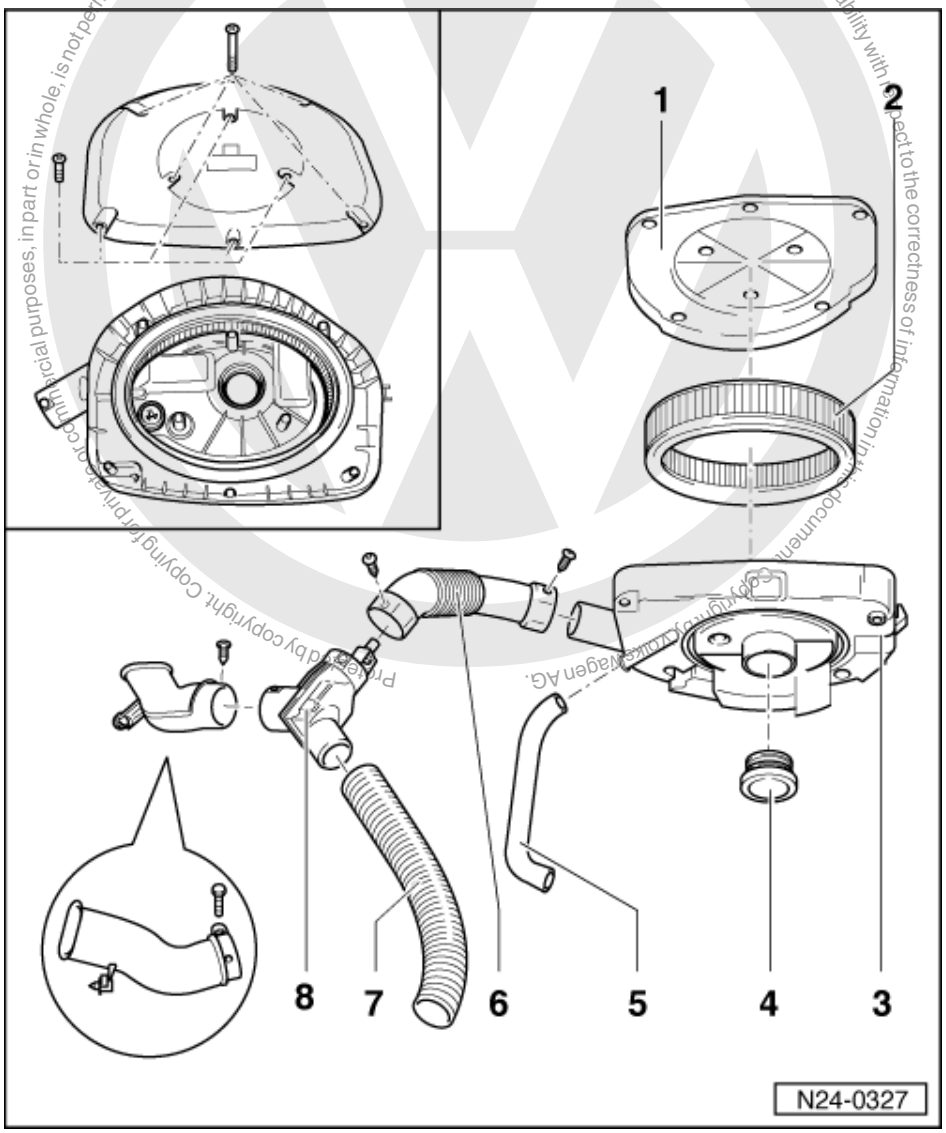

Removing air cleaner => Page 33 , Fig. 3

1 Air cleaner cover

Note:

If the cover screws are loosened or tightened with a power tool the lower part of the thread can be damaged. Therefore the use of a power tool is only permissible when:

- The power tool speed is max. 200 rpm
- The tightening torque is set to max. 3 Nm

2 Filter element
3 Air cleaner lower part
4 Seal
  - Renew if damaged

satelettronica

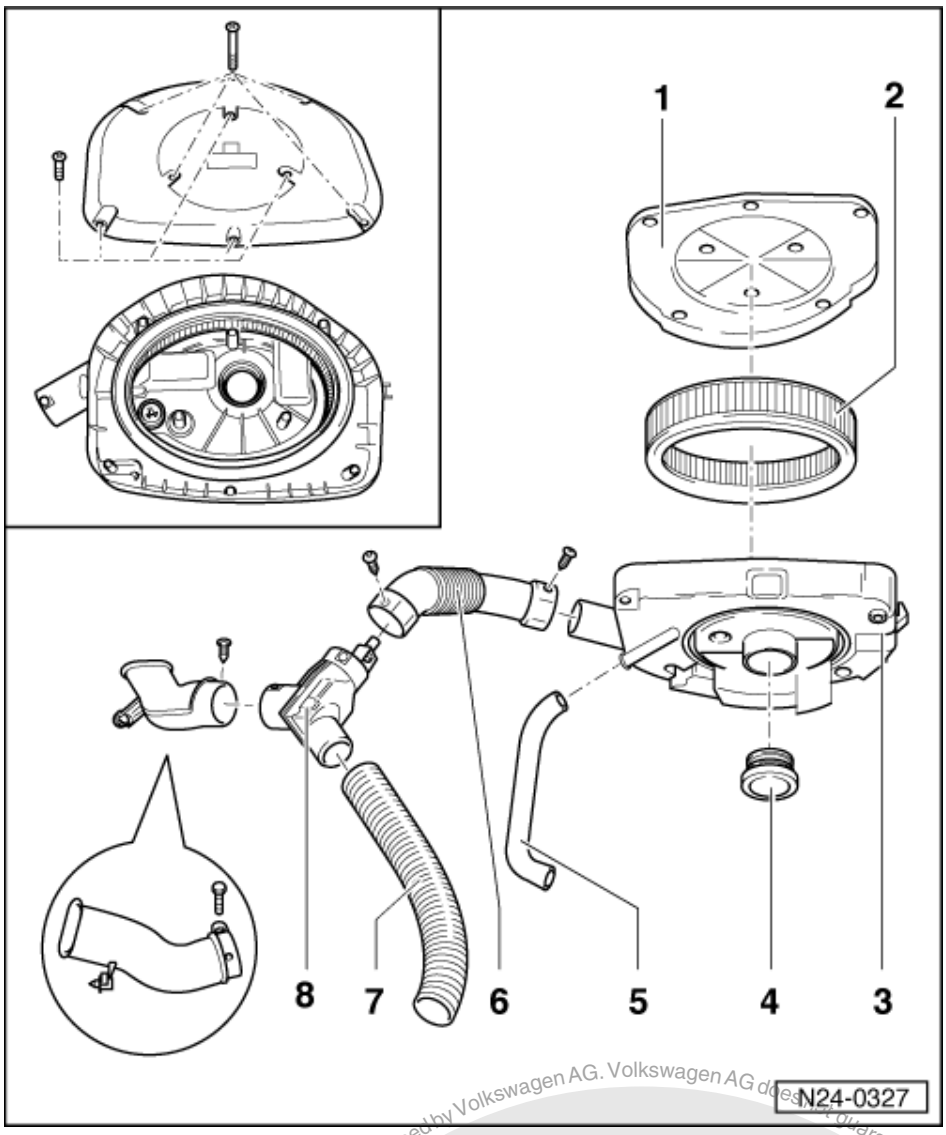

5 Crankcase breather hose
6 Connecting hose
7 Warm air intake
8 Air intake housing with regulating flap

- Check intake air preheating => Page 65

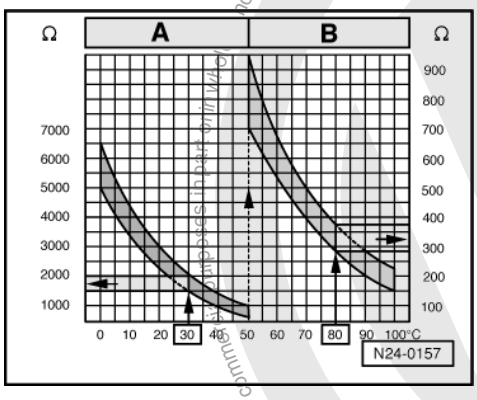

satelettronica
Protected by copyright. Copying for private or commercial purposes, in part or in whole, is not permitted unless authorised by Volkswagen AG. Volkswagen AG does not guarantee or accept any liability with respect to the correctness of information in this document. Copyright by Volkswagen AG.

-> Fig. 1 Resistance values for coolant temperature sender (G62)

Scale A shows resistance values for temperature range 0...50 °C and scale B the values for temperature range 50...100 °C.

Examples:

- 30 °C corresponds to a resistance from 1500...2000 ω
- 80 °C corresponds to a resistance from 275...375 ω

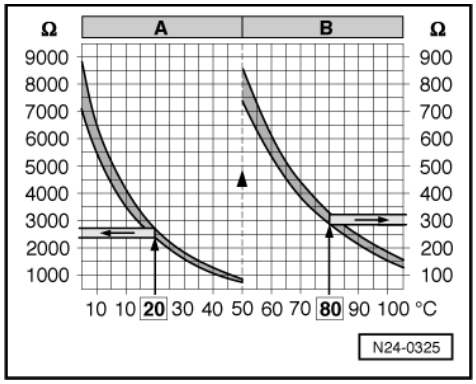

-> Fig.2 Resistance values for intake air temperature sender (G42)

Scale A shows resistance values for temperature range 0...50 °C and scale B the values for temperature range 50...100 °C.

Examples:

- 20 °C corresponds to a resistance from 2340...2680 ω
- 80 °C corresponds to a resistance from 290...330 ω

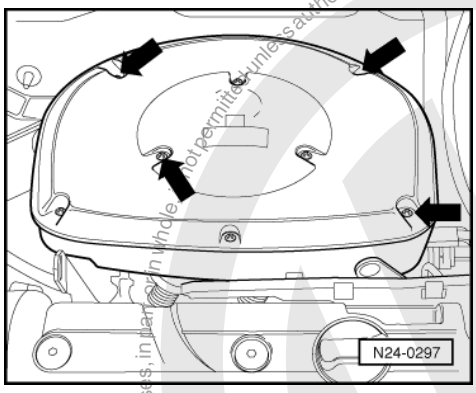

-> Fig. 3 Removing air cleaner

- Loosen air cleaner at securing screws marked by arrows.

Note:

If the securing screws are loosened or tightened with a power tool the thread in the intake pipe can be damaged. Therefore the use of a power tool is only permissible when:

- The power tool speed is max. 200 rpm
- The tightening torque is set to max. 3 Nm

Protected by copyright. Copying for private or commercial purposes, in part or in whole, is not permitted unless authorised by Volkswagen AG. Volkswagen AG does not guarantee or accept any liability with respect to the correctness of information in this document. Copyright by Volkswagen AG.
satelettronica

1.8 - Safety precautions

Warning!
Fuel system is under pressure! Before opening the system place a cloth around the connection. Then release pressure by carefully loosening the connection.

To prevent injuries to persons and/or damage to the fuel injection and ignition system, the following must be noted:

- Do not touch or disconnect ignition wiring when the engine is running or being turned at starter speed.
- The ignition must be switched off before connecting or disconnecting injection or ignition system wiring or tester cables.
- If the engine is to be turned at starter speed, without starting, e.g. when checking compressions, pull plug off Hall sender (distributor).

Observe following if test and measuring instruments are required during a test drive:

- Test and measuring instruments must be secured to rear seat and operated by a 2nd person from this location.

  If test and measuring instruments are operated from front passenger's seat and the vehicle is involved in an accident, there is a possibility that the person sitting in this seat may receive serious injuries when the airbag is triggered.

1.9 - Rules for cleanliness

When working on the fuel supply/injection system, pay careful attention to the following "5 rules":

- Thoroughly clean all unions and the adjacent areas before disconnecting.
- Place parts that have been removed on a clean surface and cover. Do not use fluffy cloths!
- Carefully cover opened components or seal, if the repair cannot be carried out immediately.
- Only install clean components:
  Only unpack replacement parts immediately prior to installation.
  Do not use parts that have been stored loose (e.g. in tool boxes etc.).
- When the system is open:
  Do not work with compressed air if this can be avoided.
  Do not move vehicle unless absolutely necessary.

1.10 - Technical data

Engine code			**AEE**
Idling speed1)			
	Manual gearbox	rpm	830...930
	Automatic gearbox	rpm	750...8502)
Engine control unit3)			
	Control unit version		1AV
	Part No.4)	Manual gearbox	032 906 030D
		Automatic gearbox	032 906 030A

Protected by copyright. Copying for private or commercial purposes, in part or in whole, is not permitted unless authorised by Volkswagen AG. Volkswagen AG does not guarantee or accept any liability with respect to the correctness of information in this document. Copyright by Volkswagen AG.
satelettronica

Engine code		AEE
Governed speed	rpm	5700...6100

1) Up-to-date specifications:

=> Exhaust emissions test binder

2) The control unit increases idling speed under following conditions:

- When the battery voltage is too low: up to 900 rpm

- After a long full throttle drive and at higher temperatures: up to 960 rpm

- When air conditioner is switched on: to approx. 900 rpm

3) If replaced carry out basic setting => Page 35

4) Current situation see parts catalogue

1.11 - Performing basic setting

Note:

The basic setting with the ignition switched on, matches the engine control unit to the throttle valve control part.

Special tools, testers, measuring instruments and auxiliary items required

- Fault reader V.A.G 1551 or vehicle system tester V.A.G 1552 with cable V.A.G 1551/3

Test conditions

- No faults must be stored in fault memory
  => Page 3 , interrogating fault memory

Test sequence

- Connect the fault reader V.A.G 1551 (V.A.G 1552). Then switch ignition on and select engine control unit with the "Address word" 01.
  (Connecting fault reader and selecting engine control unit => Page 2 .)

-> Indicated on display:

```
Rapid data transfer     HELP
Select function XX
```

- Press keys 0 and 4 for the function "Introduction of basic setting" and confirm entry with Q key.

-> Indicated on display:

```
Basic setting     HELP
Input display group number XXX
```

- Press keys 0, 0 and 1 for "Display group number 1" and confirm entry with Q key.

-> Indicated on display:
(1...4 = Display zones)

```
System in basic setting 1
     1     2     3     4
```

Copyright by Volkswagen AG. Volkswagen AG does not guarantee or accept any liability with respect to the correctness of information in this document. Copyright by Volkswagen AG. Copying for private or commercial purposes, in part or in whole, is not permitted unless authorised by Volkswagen AG.
satelettronica

After pressing the Q key, the throttle valve positioner will be moved to the min., max. and three intermediate positions and the control unit will store each individual throttle valve angle in the non-volatile memory. This procedure lasts approx. 10 seconds. The throttle valve will then remain in the start position.

Note:

If the basic setting of the control unit is interrupted, the cause could be one of the following:

- Throttle valve cannot reach the mechanical stop because of contamination e.g. oil deposits or an incorrectly adjusted throttle cable.
- Battery voltage too low.
- Throttle valve control unit or wiring is defective. Checking => Page 41 .

After an interruption the fault "Basic setting not completed, fault in basic setting" is stored in fault memory. When next switching on ignition the basic setting is automatically performed again.

- End the engine basic setting by pressing the⇒ key.
- Press keys 0 and 6 for the function "End output" and confirm entry with the Q key.

If the throttle valve positioner does not move:

- Observe 8 digit number block in display zone 4. The 2nd, 3rd and 5th position from right must be at 0.
  Display: 00000000

Note:

If in display zone 4 a 1 is displayed in the mentioned positions then test prerequisites are not fulfilled:

=>Page 16 ; Significance of figures in 8 digit number block

All positions at 0:

- Check throttle valve control part
  => Page 41 .

1.12 - Checking Lambda probe and Lambda control

Special tools, testers, measuring instruments and auxiliary items required

- Fault reader V.A.G 1551 or vehicle system tester V.A.G 1552 with cable V.A.G 1551/3
- Test box V.A.G 1598/18
- Hand multimeter V.A.G 1526 or multimeter V.A.G 1715
- Adapter set V.A.G 1594
- Current flow diagram

Check conditions

- Basic setting OK.
- Exhaust system between cylinder head and catalyst free of leaks

Test sequence

- Connect fault reader V.A.G 1551 (V.A.G 1552). Start engine and select "Address word" 01 of engine control unit. When doing this the engine must be running at idling speed.
  (Connecting fault reader and selecting engine control unit => Page 2 .)

-> Indicated on display:

```
Rapid data transfer      HELP
Select function XX
```

- Press keys 0 and 8 for the function "Read measured value block" and confirm entry with Q key.

Protected by copyright. Copying for private or commercial purposes, in part or whole, is not permitted unless authorised by Volkswagen Aktiengesellschaft. Volkswagen AG does not guarantee or accept any liability with respect to the correctness of information in this document. Copyright by Volkswagen AG.
satelettronica

-> Indicated on display:

```
Read measured value block     HELP
Input display group number XXX
```

- Press keys 0, 0 and 1 for "Display group number 1" and confirm entry with Q key.

-> Indicated on display:
(1...4 = Display zones)

```
Read measured value block     1
     1     2     3     4
```

Only continue with the test when

- The coolant temperature is above 80 °C
  -Display zone 2-
- The engine has then run for a further 2 minutes at idling speed

- Note Lambda probe voltage in display zone 3. The voltage must
  fluctuate at least 30 times per minute
  in range of
  0... 1.0 V.

If the voltage change is slower, determine cause of fault. => Page 38 .

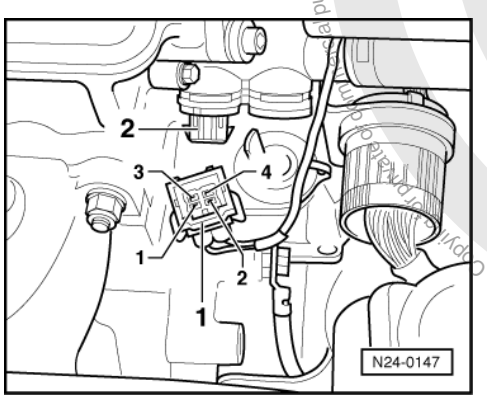

- -> Pull connector -1- off coolant temperature sender (G62) -2-. The probe voltage must
  increase
  and then decrease back to the old control range.
- Reconnect connector. The probe voltage must
  decrease
  and then increase to the old control range.

Note:

The throttle valve must not be operated during the check, otherwise the connector disconnected from the control unit will be recognised as a fault.

- Press ⇒ key.

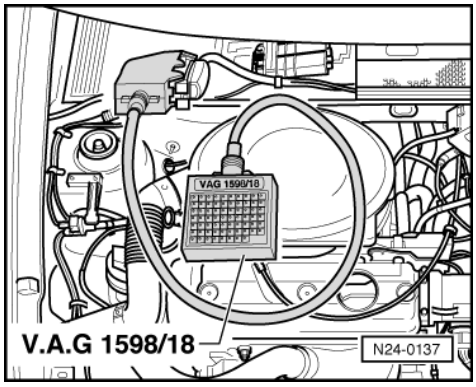

Protected by copyright. Copyright by Volkswagen AG. Volkswagen AG does not guarantee or accept any liability with respect to the correctness of information in this document. Copyright by Volkswagen AG. Reproduction in whole, in part or in any other form or for any purposes, is not permitted unless authorised by Volkswagen AG.
satelettronica

- Press keys 0 and 6 for the function "End output" and confirm entry with the Q key.
- Switch off ignition

If no control is detected:

- Check Lambda probe heating => Page 38 .
- -> Connect test box V.A.G 1598/18 to control unit wiring loom.

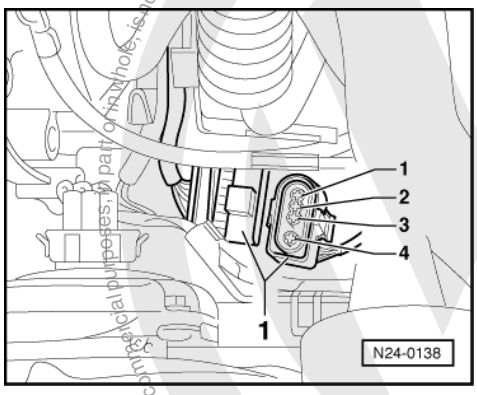

- -> Separate 4 pin connector to Lambda probe (G39) -1- (in front of gearbox).
- Check wiring between test box and connector for open circuit according to current flow diagram.
  Contact 3+socket 15
  Contact 4+socket 38
  Wire resistance: Max. 1.5 ω
- Check wiring at connector contacts 3+4 for short circuit to contacts 1+2 according to current flow diagram.
  Specification: ∞ω

If no wiring fault is detected:

- Renew Lambda probe
  => Page 24 , Item 23 .

Possible causes of fault if probe control frequency is too slow:

- The slots or holes in probe body are blocked
- The probe vent hole in area of connecting wire is blocked
- The probe has been overheated (glazed)
- The probe has been damaged by leaded fuel

1.13 - Checking Lambda probe heating

Special tools, testers, measuring instruments and auxiliary items required

- Test box V.A.G 1598/18
- Hand multimeter V.A.G 1526 or multimeter V.A.G 1715
- Adapter set V.A.G 1594
- Current flow diagram

Test conditions

- Fuel pump relay must be OK
- Fuse 18 must be OK.

Protected by copyright. Copyright by Volkswagen AG.
Volkswagen AG does not guarantee or accept any liability with respect to the correctness of information in this document. Copying for private or commercial purposes, in part or in whole, is not permitted unless authorised by Volkswagen AG.
satelettronica

Checking voltage supply

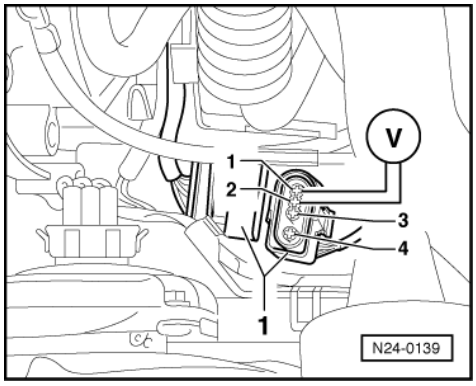

- -> Separate 4 pin connector to Lambda probe (G39) -1- (in front of gearbox).
- Connect multimeter using adapter cable from V.A.G 1594 to measure voltage on connector contacts 1+2.
- Start engine and measure voltage.
  Specification: at least 11 V
- Switch off ignition.

If no voltage is present:

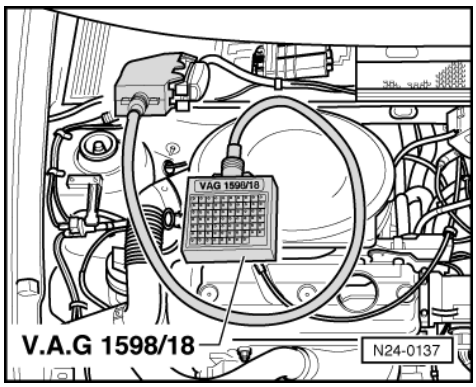

- -> Connect test box V.A.G 1598/18 to control unit wiring loom.
- Switch on ignition.
- Bridge test box sockets 1+25 with aux. cables from V.A.G 1594. The fuel pump must run.
- Observe display on multimeter.
  Specification: min. 11 V

If the specification is not obtained:

- Check wiring connections according to relay plate according to current flow diagram.

1.14 - Checking engine operating mode

Note:

Check whether engine control unit recognises the engine operating modes (idling speed, part throttle, full throttle, overrun).

Special tools, testers, measuring instruments and auxiliary items required

- Fault reader V.A.G 1551 or vehicle system tester V.A.G 1552 with cable V.A.G 1551/3

Test conditions

- Coolant temperature at least 80 °C

Protected by copyright. Copying for private or commercial purposes, in part or in whole, is not permitted unless authorised by Volkswagen AG. Volkswagen AG does not guarantee or accept any liability with respect to the correctness of information in this document. Copyright by Volkswagen AG.
Satelettronica

Test sequence

- Connect fault reader V.A.G 1551 (V.A.G 1552). Start engine and select "Address word" 01 of engine control unit. When doing this the engine must be running at idling speed.
  (Connecting fault reader and selecting engine control unit => Page 2 .)

-> Indicated on display:

```
Rapid data transfer     HELP
Select function XX
```

- Press keys 0 and 8 for the function "Read measured value block" and confirm entry with Q key.

-> Indicated on display:

```
Read measured value block     HELP
Input display group number XXX
```

- *** NIESEN ***

-> Indicated on display:
(1...4 = Display zones)

```
Read measured value block     4
     1     2     3     4
```

- Observe -8 digit number block- in display zone 4 :
  (The right-hand 4 digits are of no consequence)

Display in operating mode

◆ Idling:

2nd position from left must display 1
Display: 01000000

◆ Part throttle:

- Rev up evenly.

3rd position from left must display 1
Display:: 00100000

◆ Full throttle:

- Briefly open throttle fully (throttle burst).

4th position from left must briefly display 1
Display: 00010000

◆ Overrun mode:

- Increase engine speed to above 3000 rpm.
- Close throttle valve abruptly.

The 1st position from left must so long as speed is
for manual gearbox above 1400 rpm
for automatic gearbox above 1550 rpm
display 1
Display: 11000000 (briefly)

Note:

Below 1400 rpm or 1550 rpm idling speed is again recognised.

- Press ⇒ key.

Protected by copyright. Copying for private or commercial purposes, in part or in whole, is not permitted unless authorised by Volkswagen AG. Volkswagen AG does not guarantee or accept any liability with respect to the correctness of information in this document. Copyright by Volkswagen AG.

satelettronica

- Press keys 0 and 6 for the function "End output" and confirm entry with the Q key.

If the specifications are not attained:

- Interrogate fault memory, if necessary, repair fault and erase fault memory.
  => Page 3 , interrogating and erasing fault memory
- Check throttle valve potentiometer
  => Page 41 , Checking throttle valve control part.

1.15 - Checking throttle valve control part

Note:

If the throttle valve control part (J338) is removed and installed or replaced the basic setting must be performed => Page 35 .

Special tools, testers, measuring instruments and auxiliary items required

- Fault reader V.A.G 1551 or vehicle system tester V.A.G 1552 with cable V.A.G 1551/3
- Test box V.A.G 1598/18
- Hand multimeter V.A.G 1526 or multimeter V.A.G 1715
- Adapter set V.A.G 1594
- Current flow diagram

Checking idling switch

- Connect the fault reader V.A.G 1551 (V.A.G 1552). Then switch ignition on and select engine control unit with the "Address word" 01.
  (Connecting fault reader and selecting engine control unit => Page 2 .)

-> Indicated on display:

```
Rapid data transfer      HELP
Select function XX
```

- Press keys 0 and 8 for the function "Read measured value block" and confirm entry with Q key.

-> Indicated on display:

```
Read measured value block      HELP
Input display group number XXX
```

- Press keys 0, 0 and 1 for "Display group number 1" and confirm entry with Q key.

-> Indicated on display:
(1...4 = Display zones)

```
Read measured value block 1
     1     2     3     4
```

- Observe -8 digit number block- in display zone 4 :
  (The right-hand 4 digits are of no consequence)

  4th position from left with closed throttle valve must display 0
  Display: 00000000

- Slowly open throttle valve. After free travel, a stop is reached when opening throttle valve further the 4th position from left must jump to 1
  Display: 00010000

If the specifications are not obtained:

- Remove air cleaner => Page 33 , Fig. 3 .

Volkswagen AG. Volkswagen AG does not guarantee or accept any liability with respect to the correctness of information in this document. Copyright by Volkswagen AG.
Protected by copyright. Copying or distribution is not permitted without authorisation. Any unauthorised use or disclosure of the contents of this document, in whole or in part or in whole is not permitted.
satelettronica

Display	Cause	Continuation of check
Always 1	Open circuit or short to positive	=> Page 42
Always 0	Short to earth	=> Page 42

Continuation of check when display is always at 1

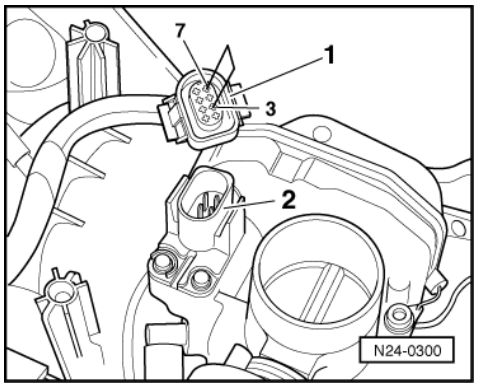

- -> Detach connector -1- from throttle valve control part -2-.
- Bridge connector contacts 3+7 with aux. cables from V.A.G 1594 and observe display.

Display 0:

- Press the ⇒key.
- Press keys 0 and 6 for the function "End output" and confirm entry with the Q key.
- Switch off ignition.
- Replace throttle valve control part
  =>Page 28 , item 4 .

Display 1:

- Press the ⇒key.
- Press keys 0 and 6 for the function "End output" and confirm entry with the Q key.
- Switch off ignition.
- Check voltage supply of throttle valve control part and wiring to control unit => Page 46 .

If the voltage supply and wirings are OK:

- Renew engine control unit
  => Page 26 , item 30

Continuation of check when display constantly shows 0

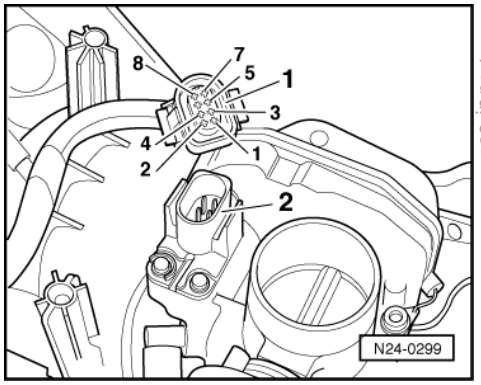

- -> Detach connector -1- from throttle valve control part -2-.

Protected by copyright. Copying for private or commercial purposes, in part or in whole is not permitted unless authorised by Volkswagen AG. Volkswagen AG does not guarantee or accept any liability with respect to the correctness of information in this document. Copyright by Volkswagen AG.
satelettronica

Display 1:
- Press the ⇒key.
- Press keys 0 and 6 for the function "End output" and confirm entry with the Q key.
- Switch off ignition.
- Replace throttle valve control part
  =>Page 28 , item 4 .

Display 0:
- Press the ⇒key.
- Press keys 0 and 6 for the function "End output" and confirm entry with the Q key.
- Switch off ignition.
- Check voltage supply of throttle valve control part and wiring to control unit => Page 46 .

If the voltage supply and wirings are OK:
- Renew engine control unit
  => Page 26 , item 30

Checking throttle valve positioner and throttle valve positioner potentiometer
Test conditions
- Coolant temperature at least 80 °C

Test sequence
- Connect fault reader V.A.G 1551 (V.A.G 1552). Start engine and select "Address word" 01 of engine control unit. When doing this the engine must be running at idling speed.
  (Connecting fault reader and selecting engine control unit => Page 2 .)

-> Indicated on display:

```
Rapid data transfer      HELP
Select function XX
```

- Press keys 0 and 8 for the function "Read measured value block" and confirm entry with Q key.

-> Indicated on display:

```
Read measured value block      HELP
Input display group number XXX
```

- Press keys 0, 0 and 3 for "Display group number 3" and confirm entry with Q key.

-> Indicated on display:
(1...4 = Display zones)

```
Read measured value block 3
     1      2      3      4
```

- Check throttle valve positioner duty cycle in display zone 4. The duty cycle must fluctuate within range
  Manual gearbox: 17...33 %
  Automatic gearbox: 17...34 %.

If the specification is not obtained:
- Press the ⇒key.
- Press keys 0 and 6 for the function "End output" and confirm entry with the Q key.
- Switch off ignition.
- Remove air cleaner => Page 33 , Fig. 3 .

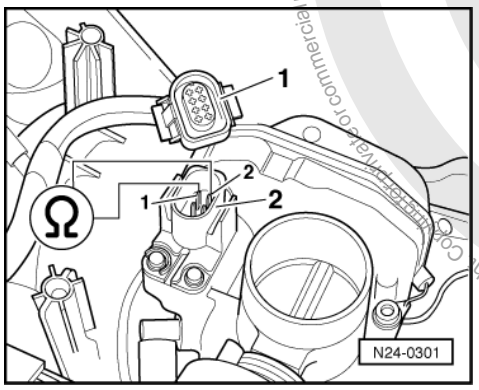

Protected by copyright. Copying for private or commercial purposes, in part or in whole, is not permitted unless authorised by Volkswagen AG. Volkswagen AG does not guarantee or accept any liability with respect to the correctness of information in this document. Copyright by Volkswagen AG.
satelettronica

- -> Detach connector -1- from throttle valve control part -2-.
- Measure throttle valve positioner resistance between connector contacts 1+2.
  Specification: 3...200 ω
- Check voltage supply of throttle valve control part and wiring to control unit => Page 46 .

If no fault is detected:

- Replace throttle valve control part
  =>Page 28 , item 4 .

Checking throttle valve potentiometer

Test conditions

- Coolant temperature at least 80 °C

Test sequence

- Connect the fault reader V.A.G 1551 (V.A.G 1552). Then switch ignition on and select engine control unit with the "Address word" 01.
  (Connecting fault reader and selecting engine control unit => Page 2 .)

-> Indicated on display:

```
Rapid data transfer     HELP
Select function XX
```

- Press keys 0 and 8 for the function "Read measured value block" and confirm entry with Q key.

-> Indicated on display:

```
Read measured value block     HELP
Input display group number XXX
```

- Press keys 0, 0 and 3 for "Display group number 3" and confirm entry with Q key.

-> Indicated on display:
(1...4 = Display zones)

```
Read measured value block 3
     1     2     3     4
```

- Read off throttle valve angle in display zone 3.The throttle valve opening angle is displayed in starting position.
- Slowly open throttle valve fully and observe angle display in display zone 3. The figure must increase uniformly over
  the complete range.
- Press the ⇒key.
- Press keys 0 and 6 for the function "End output" and confirm entry with the Q key.
- Switch off ignition.

If the figure does not increase uniformly:

- Replace throttle valve control part
  =>Page 28 , item 4 .

If the display constantly shows 0 <° or is above 100 <°:

- Remove air cleaner => Page 33 , Fig. 3 .

Display	Cause	Continuation of check
0 <°	Open circuit or short to positive	=> Page 45

satelettronica
Protected by copyright. Copying for private or commercial purposes, in part or in whole, is not permitted unless authorised by Volkswagen AG. Volkswagen AG does not guarantee or accept any liability with respect to the correctness of information in this document. Copyright by Volkswagen AG.

Display	Cause	Continuation of check
above 100 <°	Short to earth	=> Page 45

Continuation of check when display 0 <°:

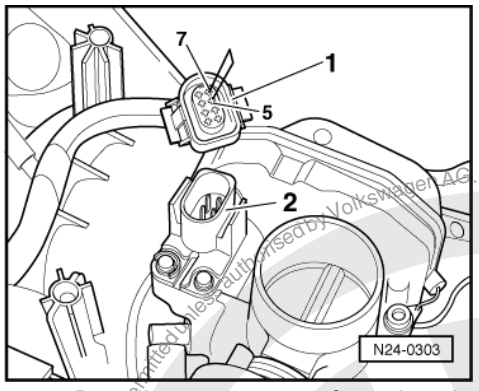

- -> Detach connector -1- from throttle valve control part -2-.
- Bridge connector contacts 5+7 with auxiliary cables from V.A.G 1594 and observe display.

Display above 100 <°:

- Press ⇒key.
- Press keys 0 and 6 for the function "End output" and confirm entry with the Q key.
- Switch off ignition.
- Replace throttle valve control part
  =>Page 28 , item 4 .

Display 0 <°:

- Press ⇒key.
- Press keys 0 and 6 for the function "End output" and confirm entry with the Q key.
- Switch off ignition.
- Check voltage supply of throttle valve control part and wiring to control unit => Page 46 .

If the voltage supply and wirings are OK:

- Renew engine control unit
  => Page 26 , item 30

Continuation of check when display is above 100 <°:

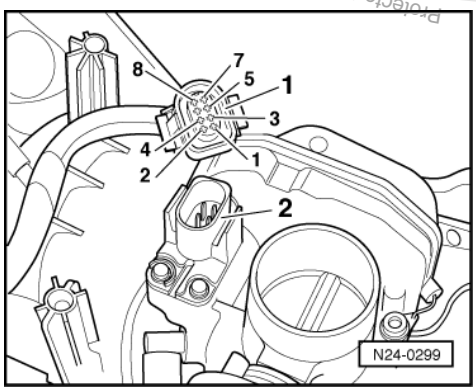

- -> Detach connector -1- from throttle valve control part -2-.

Display 0 <°:

- Press ⇒key.
- Press keys 0 and 6 for the function "End output" and confirm entry with the Q key.
- Switch off ignition.

Protected by Copyright. Copyright by Volkswagen AG. Volkswagen AG does not guarantee or accept any liability with respect to the correctness of information in this document. Copyright by Volkswagen AG. Protected by Copyright. Copying for private or commercial purposes, in whole or in part, is not permitted unless authorised by Volkswagen AG.
satelettronica

- Replace throttle valve control part
  =>Page 28 , item 4 .

Display above 100 <°:

- Press ⇒key.
- Press keys 0 and 6 for the function "End output" and confirm entry with the Q key.
- Switch off ignition.
- Check voltage supply of throttle valve control part and wiring to control unit => Page 46 .

If the voltage supply and wirings are OK:

- Renew engine control unit
  => Page 26 , item 30

Checking voltage supply and wiring to control unit

- Remove air cleaner => Page 33 , Fig. 3 .

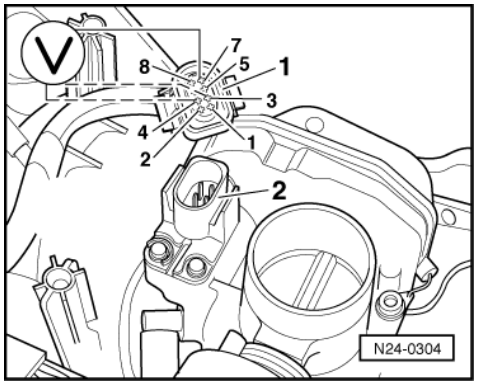

- -> Detach connector -1- from throttle valve control part -2-.
- Connect multimeter to measure voltage at connector contacts 4+7.
- Switch on ignition.
  Specification: min. 4.5 V
- Switch off ignition.
- Connect multimeter to measure voltage at connector contacts 3+7.
- Switch on ignition.
  Specification: min. 9 V

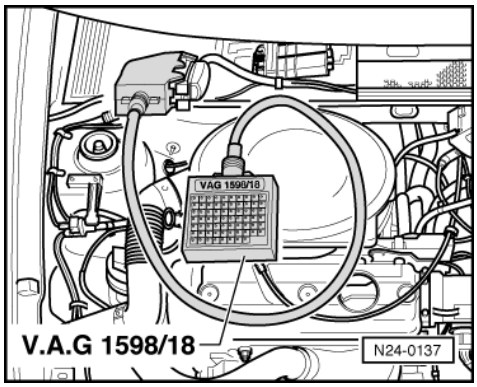

- Switch off ignition.
- -> Connect test box V.A.G 1598/18 to control unit wiring loom.

Protected by copyright. Copying for private or commercial purposes, in part or in whole, is not permitted unless authorised by Volkswagen AG. Volkswagen AG does not guarantee or accept any liability with respect to the correctness of information in this document. Copyright by Volkswagen AG.
satelettronica

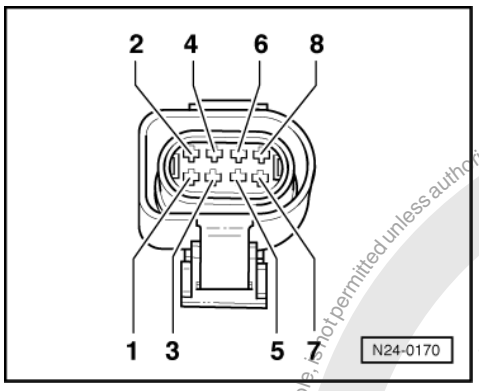

- -> Check wiring between test box and connector for open circuit according to current flow diagram.
  Contact 1+socket 2
  Contact 2+socket 26
  Contact 3+socket 10
  Contact 4+socket 14
  Contact 5+socket 41
  Contact 7+socket 17
  Contact 8+socket 16
  Wire resistance: Max. 1.5 ω
- Additionally check wires for short to one another.
  Specification: ∞ω

If no wiring fault is detected:

- Check voltage supply of engine control unit => Page 56 .

1.16 - Checking intake manifold pressure sender

Special tools, testers, measuring instruments and auxiliary items required

- Fault reader V.A.G 1551 or vehicle system tester V.A.G 1552 with cable V.A.G 1551/3
- Hand multimeter V.A.G 1526 or multimeter V.A.G 1715
- Test box V.A.G 1598/18
- Adapter set V.A.G 1594
- Current flow diagram

Test sequence

- Connect fault reader V.A.G 1551 (V.A.G 1552). Start engine and select "Address word" 01 of engine control unit. When doing this the engine must be running at idling speed.
  (Connecting fault reader and selecting engine control unit => Page 2 .)

-> Indicated on display:

```
Rapid data transfer     HELP
Select function XX
```

- Press keys 0 and 8 for the function "Read measured value block" and confirm entry with Q key.

-> Indicated on display:

```
Read measured value block     HELP
Input display group number XXX
```

- Press keys 0, 0 and 3 for "Display group number 3" and confirm entry with Q key.

-> Indicated on display:
(1...4 = Display zones)

Protected by copyright. Copying for private or commercial purposes, is not permitted unless authorised by Volkswagen AG. Volkswagen AG does not guarantee or accept any liability with respect to the correctness of information in this document. Copyright by Volkswagen AG.
satelettronica

```
Read measured value block 3
     1     2     3     4
```

- Read off the displayed value for engine load in display zone 2 and note this value.
- Briefly open throttle valve. The engine load value must increase briefly.

If the display shows constantly 0 % or 100 %:

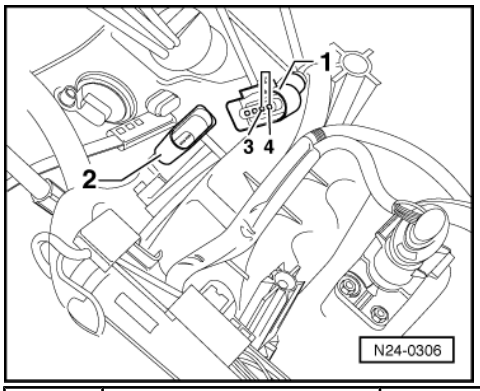

Display	Cause	Continuation of check
0 %	Open circuit or short to earth	=> Page 48
100 %	Short to positive	=> Page 49

Continuation of check when display 0%:

- -> Pull connector -1- off intake manifold pressure sender (G71) with intake air temperature sender (G42) -2- (engine stops).
- Bridge connector contacts 3+4.

Display 100 %:

- Press ⇒key.
- Press keys 0 and 6 for the function "End output" and confirm entry with the Q key.
- Switch off ignition.
- Renew the intake manifold pressure sender (G71) with intake air temperature sender (G42) -2- => Page 28 , item 1 .

Display 0 %:

- Press ⇒key.
- Press keys 0 and 6 for the function "End output" and confirm entry with the Q key.
- Switch off ignition.

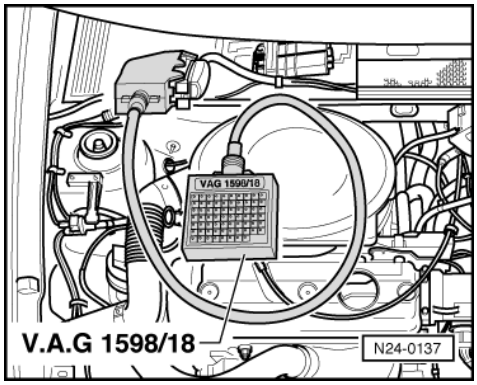

- -> Connect test box V.A.G 1598/18 to control unit wiring loom.
- Check wiring between test box and connector for open circuit according to current flow diagram.
  Contact 3+socket 37
  Contact 4+socket 18

Protected by copyright. Copyright by Volkswagen AG.
Copyright by Volkswagen AG. Volkswagen AG does not guarantee or accept any liability with respect to the correctness of information in this document.
satelettronica

Wire resistance: Max. 1.5 ω
- Additionally check wiring contact 4 for short to earth and to contact 1.
  Specification: ∞ω

If no wiring fault is detected:

- Renew engine control unit
  => Page 26 , item 30

Continuation of check when display 100 %:

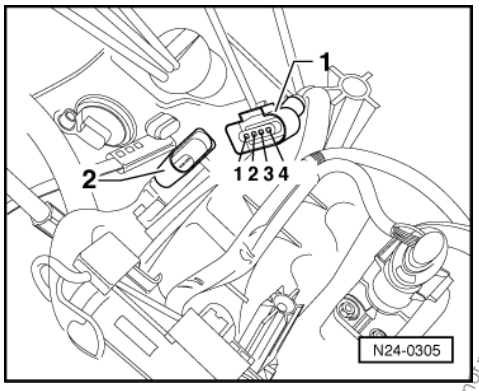

- -> Pull connector -1- off intake manifold pressure sender (G71) with intake air temperature sender (G42) -2- (engine stops).

Display 0 %:

- Press ⇒key.
- Press keys 0 and 6 for the function "End output" and confirm entry with the Q key.
- Switch off ignition.
- Renew the intake manifold pressure sender (G71) with intake air temperature sender (G42) -2-
  => Page 28 , item 1 .

Display 100 %:

- Press the ⇒key.
- Press keys 0 and 6 for the function "End output" and confirm entry with the Q key.
- Switch off ignition.
- Pull connector off engine control unit.
- Check wiring to control unit connector at 4 pin connector contact 4 for short to wire contact 3 and to battery positive.
  Specification: ∞ω

If no wiring fault is detected:

- Renew engine control unit
  => Page 26 , item 30

1.17 - Checking speed signal

Special tools, testers, measuring instruments and auxiliary items required

- Fault reader V.A.G 1551 or vehicle system tester V.A.G 1552 with cable V.A.G 1551/3
- Hand multimeter V.A.G 1526 or multimeter V.A.G 1715
- Test box V.A.G 1598/18
- Adapter set V.A.G 1594
- Current flow diagram

Protected by copyright. Copying for private or commercial purposes, in part or in whole, is not permitted unless authorised by Volkswagen AG. Volkswagen AG does not guarantee or accept any liability with respect to the correctness of information in this document. Copyright by Volkswagen AG.
satelettronica

Test conditions

- Speedometer must be OK., checking speedometer:

=> Repair group 90; Electrical system Electrical system

Test sequence

Note:

To check the speed signal the vehicle must be driven. To do this a second person is necessary.

Warning! Secure fault reader to rear seat and operate from this position.

- Connect fault reader V.A.G 1551 (V.A.G 1552). Start engine and select "Address word" 01 of engine control unit. When doing this the engine must be running at idling speed.
  (Connecting fault reader and selecting engine control unit => Page 2 .)

-> Indicated on display:

```
Rapid data transfer      HELP
Select function XX
```

- Press keys 0 and 8 for the function "Read measured value block" and confirm entry with Q key.

-> Indicated on display:

```
Read measured value block      HELP
Input display group number XXX
```

- *** NIESEN ***

-> Indicated on display:
(1...4 = Display zones)

```
Read measured value block 4
     1      2      3      4
```

- Carry out test drive and when doing use a 2nd person to observe display.
- Note display value with vehicle stationary.
- Drive off slowly. The displayed value must decrease.
- Press the ⇒key.
- Press keys 0 and 6 for the function "End output" and confirm entry with the Q key.

If the display does not change:

- Switch off ignition.

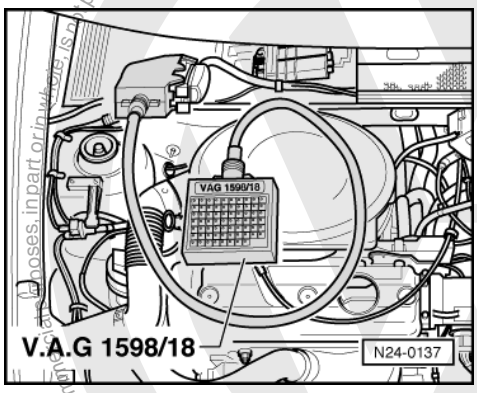

- -> Connect test box V.A.G 1598/18 to control unit wiring loom.
- Set multimeter scale to measure voltage and connect between test box sockets 1+36.
- Switch on ignition.
- Lift front left-hand wheel.

satelettronica

- Rotate front wheel and observe voltage display.
  Specification: between 0 and at least 4 Volt fluctuating

If the display does not fluctuate:

- Check wiring to speedometer or to speedometer sender.

=> Current flow diagrams, Electrical fault finding and Fitting locations binder

1.18 - Checking coolant temperature sender

Special tools, testers, measuring instruments and auxiliary items required

- Fault reader V.A.G 1551 or vehicle system tester V.A.G 1552 with cable V.A.G 1551/3
- Test box V.A.G 1598/18
- Hand multimeter V.A.G 1526 or multimeter V.A.G 1715
- Adapter set V.A.G 1594
- Current flow diagram

Test sequence

- Connect fault reader V.A.G 1551 (V.A.G 1552). Start engine and select "Address word" 01 of engine control unit. When doing this the engine must be running at idling speed.
  (Connecting fault reader and selecting engine control unit => Page 2 .)

-> Indicated on display:

```
Rapid data transfer        HELP
Select function XX
```

- Press keys 0 and 8 for the function "Read measured value block" and confirm entry with Q key.

-> Indicated on display:

```
Read measured value block     HELP
Input display group number XXX
```

- Press keys 0, 0 and 1 for "Display group number 1" and confirm entry with Q key.

-> Indicated on display:
(1...4 = Display zones)

```
Read measured value block     1
     1     2     3     4
```

- Note coolant temperature value in display zone 2.

Display	Cause	Continuation of check
-40 °C	Open circuit or short to positive	=> Page 52
Approx. 128 °C	Short to earth	=> Page 53
Approx. coolant temperature1)	---	Only if sporadic faults have been detected:2) => Page 53

1) If a temperature is displayed which deviates greatly from the ambient temperature of the sender, check sender wiring for transfer resistances.

satelettronica

2) Check is only possible when the engine is cold.

Continuation of check when display -40 °C:

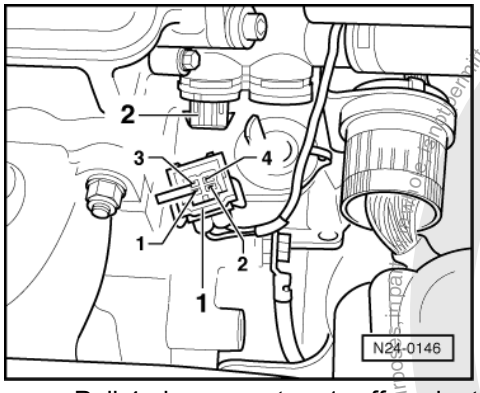

- -> Pull 4 pin connector -1- off coolant temperature sender (G62) -2-.
- Bridge connector contacts 1+3 using aux. cables from V.A.G 1594 and observe display.

Display approx. 128 ° C:

- Press ⇒key.
- Press keys 0 and 6 for the function "End output" and confirm entry with the Q key.
- Switch off ignition.
- Renew coolant temperature sender -2- => Page 24 , item 20 .

Display -40 ° C:

- Press ⇒key.
- Press keys 0 and 6 for the function "End output" and confirm entry with the Q key.
- Switch off ignition.

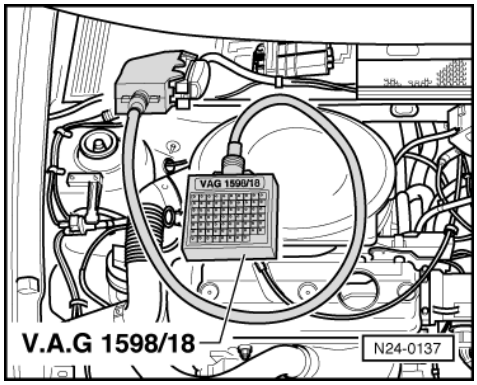

- -> Connect test box V.A.G 1598/18 to control unit wiring loom.
- Check wire between test box socket 42 and 4 pin connector contact 3 for open circuit according to current flow diagram.
  Wire resistance: Max. 1.5 ω
- Check wiring additionally for short circuit to battery positive.
  Specification: ∞ω
- Check wire between test box socket 17 and 4 pin connector contact 1 for open circuit according to current flow diagram.
  Wire resistance: Max. 1.5 ω

Protected by copyright. Copyright by Volkswagen AG. Volkswagen AG does not guarantee or accept any liability with respect to the correctness of information in this document. Copyright by Volkswagen AG. Reproduction or publication or commercial use is not permitted unless authorised by Volkswagen AG.
satelettronica

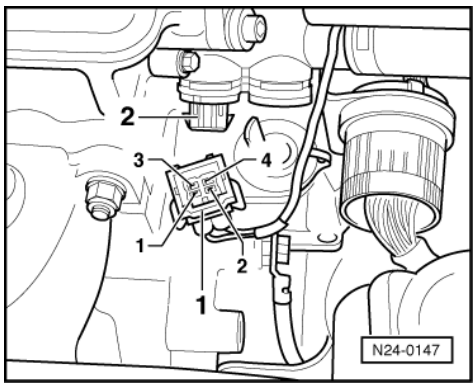

If no fault in wire is detected:

- Renew engine control unit
  => Page 26 , item 30

Continuation of check when display 128 °C:

- -> Pull 4 pin connector -1- off coolant temperature sender (G62) -2-.

Display -40 ° C:

- Press ⇒key.
- Press keys 0 and 6 for the function "End output" and confirm entry with the Q key.
- Switch off ignition.
- Renew coolant temperature sender -2- => Page 24 , item 20 .

Display approx. 128 ° C:

- Press ⇒key.
- Press keys 0 and 6 for the function "End output" and confirm entry with the Q key.
- Switch off ignition.
- Pull connector off engine control unit.
- Check wire between control unit connector and 4 pin connector contact 3 for short to wire contact 1 and to vehicle earth, according to current flow diagram.
  Specification: ∞ω

If no fault in wire is detected:

- Renew engine control unit
  => Page 26 , item 30

Continuation of check when display = coolant temperature:

Functional check of sender

- Observe coolant temperature value in display zone 2, whilst engine is running. The temperature figure must increase uniformly and without interruption.

Notes:

- If the display on fault reader jumps by 2...5 °C, it is a control unit fault and not caused by a defective sender.
- If irregular engine running occurs in certain temperature ranges and the temperature figure does not increase without interruption, the temperature signal is temporarily interrupted and the sender must be renewed.

- Press ⇒key.
- Press keys 0 and 6 for the function "End output" and confirm entry with the Q key.

Protected by copyright. Copying for private or commercial purposes, in part or in whole, is not permitted unless authorised by Volkswagen AG. Volkswagen AG does not guarantee or accept any liability with respect to the correctness of information in this document. Copyright by Volkswagen AG.
satelettronica

1.19 - Checking intake air temperature sender

Special tools, testers, measuring instruments and auxiliary items required

- Fault reader V.A.G 1551 or vehicle system tester V.A.G 1552 with cable V.A.G 1551/3
- Test box V.A.G 1598/18
- Hand multimeter V.A.G 1526 or multimeter V.A.G 1715
- Adapter set V.A.G 1594
- Current flow diagram
- Chilling spray (commercially available)

Test sequence

- Connect the fault reader V.A.G 1551 (V.A.G 1552). Then switch ignition on and select engine control unit with the "Address word" 01.
  (Connecting fault reader and selecting engine control unit => Page 2 .)

-> Indicated on display:

```
Rapid data transfer      HELP
Select function XX
```

- Press keys 0 and 8 for the function "Read measured value block" and confirm entry with Q key.

-> Indicated on display:

```
Read measured value block      HELP
Input display group number XXX
```

- Press keys 0, 0 and 2 for "Display group number 2" and confirm entry with Q key.

-> Indicated on display:
(1...4 = Display zones)

```
Read measured value block 2
     1      2      3      4
```

- Read off intake air temperature value in display zone 4.

Display	Cause	Continuation of check
-40 °C	Open circuit or short to positive	=> Page 54
129 °C	Short to earth	=> Page 55
Approx. ambient temperature1)	---	=> Page 56

1) If a temperature is displayed which is below the ambient air temperature of the sender, check sender wiring for transfer resistances. Note when doing this that sender is heated from external sources, e.g. radiated heat when engine is not running.

Continuation of check when display -40 °C:

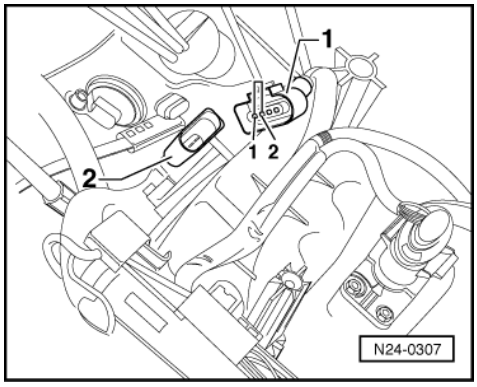

Protected by copyright. Copyright by Volkswagen AG.
Copyright by Volkswagen AG. Volkswagen AG does not guarantee or accept any liability with respect to the correctness of information in this document. Copyright by Volkswagen AG.
satelettronica

- -> Pull connector -1- off intake air temperature sender (G42) with intake manifold pressure sender (G71) -2-.
- Bridge connector contacts 1+2 using aux. cables from V.A.G 1594 and observe display.

Display 129 ° C:

- Press ⇒key.
- Press keys 0 and 6 for the function "End output" and confirm entry with the Q key.
- Switch off ignition.
- Renew intake air temperature sender (G42) with intake manifold pressure sender -2- =>Page 28 , item 1 .

Display -40 ° C:

- Press ⇒key.
- Press keys 0 and 6 for the function "End output" and confirm entry with the Q key.
- Switch off ignition.

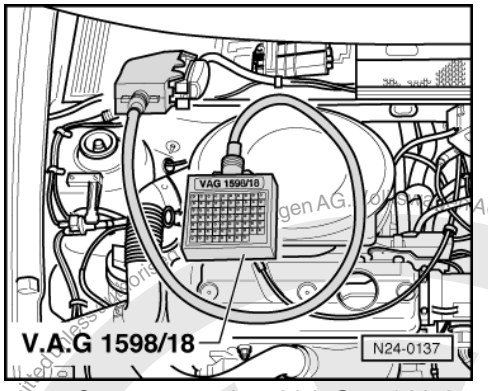

- -> Connect test box V.A.G 1598/18 to control unit wiring loom.
  Check wire between test box socket 43 and 4 pin connector contact 2 for open circuit according to current flow diagram.
  Wire resistance: Max. 1.5 ω
- Check wiring additionally for short circuit to battery positive.
  Specification: ∞ω
- Check wire between test box socket 17 and 4 pin connector contact 1 for open circuit according to current flow diagram.
  Wire resistance: Max. 1.5 ω

If no fault in wire is detected:

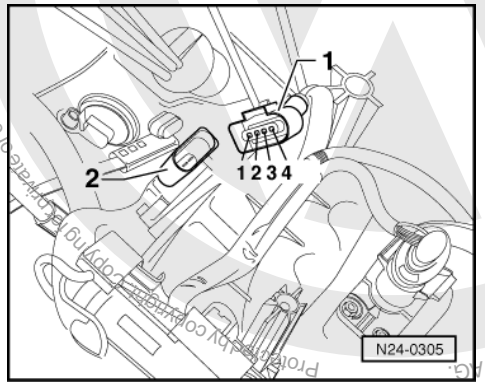

- Renew engine control unit
  => Page 26 , item 30

Continuation of check when display 129 °C:

- -> Pull connector -1- off intake air temperature sender (G42) with intake manifold pressure sender (G71) -2-.

satelettronica

Display -40 ° C:

- Press ⇒key.
- Press keys 0 and 6 for the function "End output" and confirm entry with the Q key.
- Switch off ignition.
- Renew intake air temperature sender (G42) with intake manifold pressure sender -2- =>Page 28 , item 1 .

Display 129 ° C:

- Press ⇒key.
- Press keys 0 and 6 for the function "End output" and confirm entry with the Q key.
- Switch off ignition.
- Pull connector off engine control unit.
- Check wiring to control unit connector at 4 pin connector contact 2 for short to wire contact 1 and to vehicle earth.
  Specification: ∞ω

If no wiring fault is detected:

- Renew engine control unit
  => Page 26 , item 30

Continuation of check when display = ambient temperature:

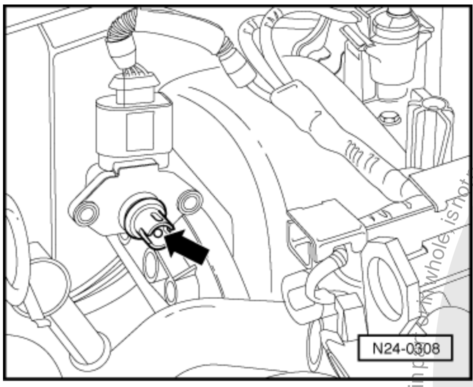

- -> Remove intake air temperature sender together with intake manifold pressure sender (connector remains connected).
- Note intake air temperature value in display zone 4.
- Spray sender with commercial chilling agent whilst observing the temperature value. The temperature value must
  decrease.
- Press ⇒key.
- Press keys 0 and 6 for the function "End output" and confirm entry with the Q key.

1.20 - Checking control unit voltage supply

Special tools, testers, measuring instruments and auxiliary items required

- Fault reader V.A.G 1551 or vehicle system tester V.A.G 1552 with cable V.A.G 1551/3
- Test box V.A.G 1598/18
- Hand multimeter V.A.G 1526 or multimeter V.A.G 1715
- Adapter set V.A.G 1594
- Current flow diagram

Check conditions

- Battery voltage at least 11 V.

Protected by copyright. Copying for private or commercial purposes, in part or in whole, is not permitted unless authorised by Volkswagen AG. Volkswagen AG does not guarantee or accept any liability with respect to the correctness of information in this document. Copyright by Volkswagen AG.
sateletronica

- Alternator must be OK

Test sequence

- Connect fault reader V.A.G 1551 (V.A.G 1552). Start engine and select "Address word" 01 of engine control unit. When doing this the engine must be running at idling speed.
  (Connecting fault reader and selecting engine control unit => Page 2 .)

-> Indicated on display:

```
Rapid data transfer      HELP
Select function XX
```

- Press keys 0 and 8 for the function "Read measured value block" and confirm entry with Q key.

-> Indicated on display:

```
Read measured value block      HELP
Input display group number XXX
```

- Press keys 0, 0 and 2 for "Display group number 2" and confirm entry with Q key.

-> Indicated on display:
(1...4 = Display zones)

```
Read measured value block 2
     1     2     3     4
```

- Read off display values in display zone 3.
  Specification: constantly approx. battery voltage
- Press ⇒key.

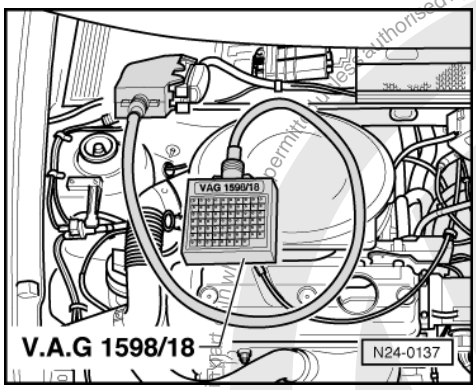

- Press keys 0 and 6 for the function "End output" and confirm entry with the Q key.

If the displayed figure fluctuates or the battery voltage is not attained:

- Switch off ignition.
- -> Connect test box V.A.G 1598/18 to control unit wiring loom.

- Measure supply voltage between test box sockets 1+21 using multimeter and adapter cables from V.A.G 1594:
  Specification: at least 11 V
- Switch on ignition.
- Measure supply voltage between test box sockets 1+23 using multimeter and adapter cables from V.A.G 1594:
  Specification: at least 11 V

If the specifications are not attained:

- Check wiring connections according to relay plate according to current flow diagram.

Protected by copyright. Copying for private or commercial purposes, in part or in whole, is not permitted unless authorised by Volkswagen AG. Volkswagen AG does not guarantee or accept any liability with respect to the correctness of information in this document. Copyright by Volkswagen AG.
satelettronica

1.21 - Matching engine control unit to electronic immobilizer

Special tools, testers, measuring instruments and auxiliary items required

- Fault reader V.A.G 1551 or vehicle system tester V.A.G 1552 with cable V.A.G 1551/3

Test conditions

- Authorized vehicle key required

Work sequence

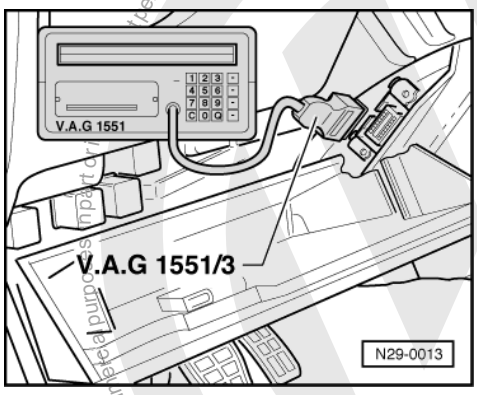

- -> Fold driver's side stowage compartment down.
- Connect fault reader V.A.G 1551 or vehicle system tester V.A.G 1552 with cable V.A.G 1551/3.
- Switch on ignition.
- Operate fault reader or vehicle system tester taking into account the information on the display:
- Press key 1 for "Rapid data transfer".
- Press keys 2 and 5 for address word "Immobilizer" and confirm entry with Q key.
- After the immobilizer control unit has registered, press ⇒ key.

-> Indicated on display:

```
Rapid data transfer      HELP
Select function XX
```

- Press keys 1 and 0 for function "Adaption" and confirm entry with Q key.

-> Indicated on display:

```
Adaption
Feed in channel number XX
```

- Press key 0 twice for "Channel number 0" and confirm entry with Q key.

-> Indicated on display:

```
Adaption     Q
Erase learnt values?
```

- Confirm input with Q key.

-> Indicated on display:

```
Adaption
Learnt values have been erased
```

- Conclude adaption by pressing ⇒ key.
- Press keys 0 and 6 for the function "End output" and confirm entry with the Q key.
- Switch off ignition

Copyright by Volkswagen AG. Protected by copyright. Copying permitted only if authorised by Volkswagen AG. Volkswagen AG does not guarantee or accept any liability with respect to the correctness of information in this document.
satelettronica

Note:
The identity of the engine control unit is read into the immobilizer control unit when next switching the ignition on.

1.22 - Checking air conditioner and air conditioner compressor signals

These signals from the air conditioner cause the initial control value for the idling stabilization to be increased when the air conditioner compressor switches in. Thereby the idling stabilization remains in the middle of the regulating range.

Special tools, testers, measuring instruments and auxiliary items required

- Fault reader V.A.G 1551 or vehicle system tester V.A.G 1552 with cable V.A.G 1551/3
- Test box V.A.G 1598/18
- Hand multimeter V.A.G 1526 or multimeter V.A.G 1715
- Adapter set V.A.G 1594
- Current flow diagram

Test conditions

- Air conditioner functioning OK.
- Air conditioner must be switched off
- No faults must be stored in fault memory
  => Page 3 , interrogating fault memory
- Vehicle at room temperature (warmer than + 15 °C).

Test sequence

- Connect fault reader V.A.G 1551 (V.A.G 1552). Start engine and select "Address word" 01 of engine control unit. When doing this the engine must be running at idling speed.
  (Connecting fault reader and selecting engine control unit => Page 2 .)

-> Indicated on display:

```
Rapid data transfer      HELP
Select function XX
```

- Press keys 0 and 8 for the function "Read measured value block" and confirm entry with Q key.

-> Indicated on display:

```
Read measured value block     HELP
Input display group number XXX
```

- Press keys 0, 0 and 1 for "Display group number 1" and confirm entry with Q key.

-> Indicated on display:
(1...4 = Display zones)

```
Read measured value block      1
     1     2     3     4
```

- Observe 8 digit number block in display zone 4. 3rd position from left must display 0.
  Display: 00000000
- Switch on air conditioner. Adjust lowest temperature and highest blower stage.

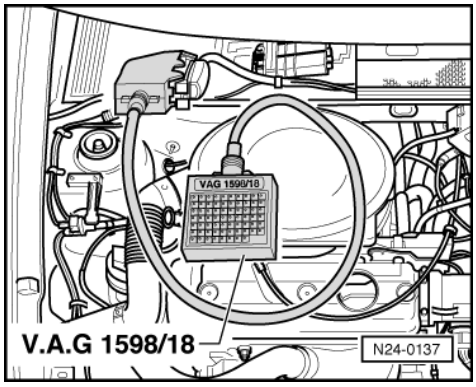

Protected by copyright. Copyright by Volkswagen AG.
Copyright by Volkswagen AG. Volkswagen AG does not guarantee or accept any liability with respect to the correctness of information in this document.
Copying for private or commercial purposes, in part or in whole, is not permitted unless authorised by Volkswagen AG.
satelettronica

3rd position from left must now display 1
Display: 00100000

If the display does not change:
- -> Connect test box V.A.G 1598/18 to control unit wiring loom.

- Check wiring between test box sockets 33 and 35 and the air conditioner for open circuit according to current flow diagram.
  Wire resistance: Max. 1.5 ω

1.23 - Checking injectors

Checking activation
Special tools, testers, measuring instruments and auxiliary items required
- Test box V.A.G 1598/18
- Hand multimeter V.A.G 1526 or multimeter V.A.G 1715
- Diode test lamp V.A.G 1527
- Adapter set V.A.G 1594
- Current flow diagram

Check conditions
- Hall sender in distributor must be OK.
- Fuel pump relay must be OK

Test sequence
- Remove air cleaner => Page 33 , Fig. 3 .

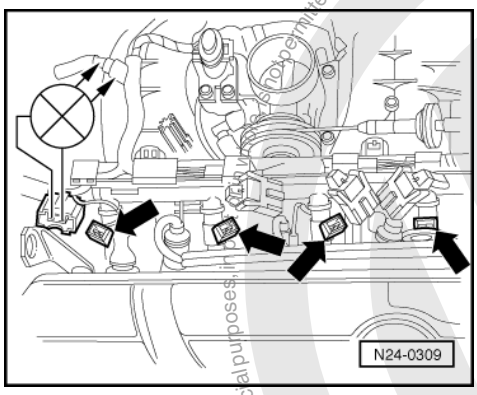

- -> Pull connector off injectors -arrows-.
- Connect diode test lamp V.A.G 1527 using aux. cables from V.A.G 1594 to connector contacts of Cyl. 1.
- Operate starter.
  The LED must flicker
- Repeat check at the injector connectors Cyl. 2...4.

The LED does not flicker on any cylinder:

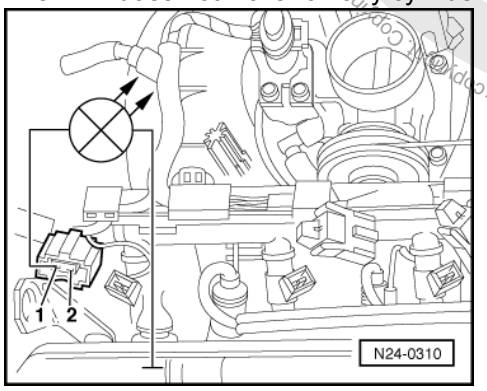

satelettronica

- -> Connect diode test lamp to connector Cyl. 1, contact 1 and earth.
- Operate starter.
  The LED must light up

If the LED does not light up:

- Check wire between 2 pin connector contact 1 and fuel pump relay (J17) for open circuit according to current flow diagram.
  Wire resistance: max. 1.5 ω

The LED flickers on one or several cylinders:

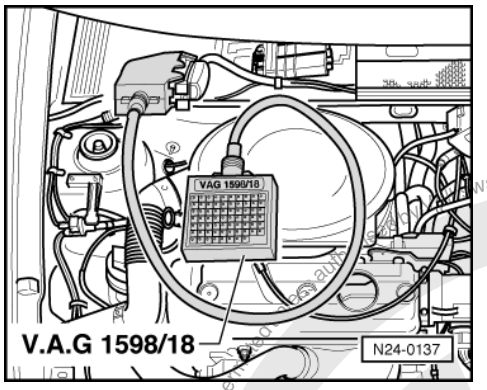

- -> Connect test box V.A.G 1598/18 to control unit wiring loom.
- Check wiring between test box and connectors of injectors for open circuit according to current flow diagram.
  Cyl. 1 connector, contact 2+socket 7
  Cyl. 2 connector, contact 2+socket 6
  Cyl. 3 connector, contact 2+socket 28
  Cyl. 4 connector, contact 2+socket 4
  Wire resistance: Max. 1.5 ω
- Additionally check wires for short to one another.
  Specification: ∞ω
- Check wiring between connector contacts 1 of injectors for open circuit.
  Wire resistance: Max. 1.5 ω

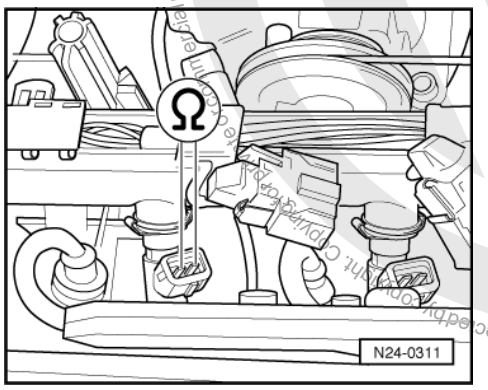

- Additionally check wires for short to one another.
  Specification: ∞ω

Checking resistance of injectors with wiring

- -> Check of resistance injectors between contacts.
  Specification: 14...17 ω

Checking spray pattern and for leaks

Special tools, testers, measuring instruments and auxiliary items required

- Adapter set V.A.G 1594
- Digital potentiometer V.A.G 1630

Protected by copyright. Copyright by Volkswagen AG. Volkswagen AG does not guarantee or accept any liability with respect to the correctness of information in this document.
satelettronica

- Measuring unit V.A.G 1602

Test sequence

- Pull 3 pin connector off ignition transformer.

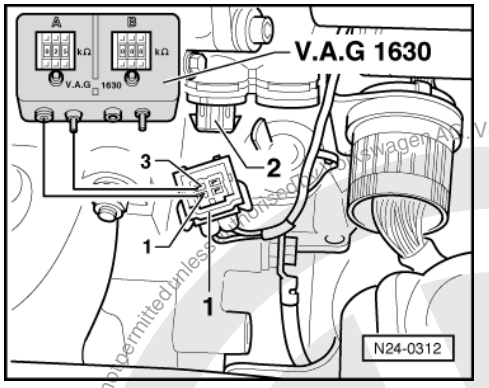

- -> Pull 4 pin connector -1- off coolant temperature sender (G62) -2-.
- Connect digital potentiometer V.A.G 1630 using aux. cables from V.A.G 1594 to connector contacts 1+3 and set connected side to 15 kω.
- Pull connector off throttle valve control part, oil pressure switch and intake manifold pressure sender, and unclip wiring at intake pipe and coolant regulator housing.
- Remove fuel manifold complete with all injectors from intake pipe (fuel hoses remain connected).

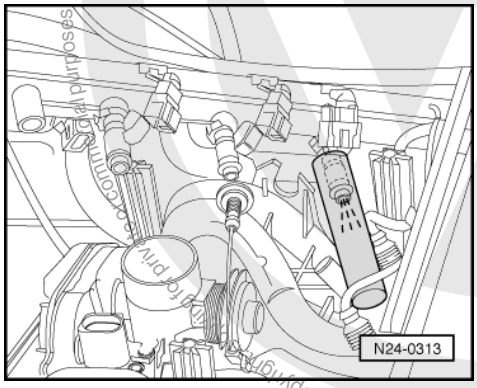

- -> Hold a small container under the injector to be checked and pull connectors off all other injectors.
- Operate starter, using a 2nd person. Injector must spray pulsatingly.
- Repeat check with other injectors ensuring that injector to be checked is only connected.
- Switch off ignition and afterwards check injectors for leaks. No more than
  2 drops/min
  may leak from each injector.

Note:

When installing the injectors ensure that the O rings

are not damaged.

1.24 - Checking fuel pressure regulator and holding pressure

The fuel pressure regulator controls the fuel pressure dependent upon intake manifold pressure.

Special tools, testers, measuring instruments and auxiliary items required

- Pressure tester V.A.G 1318
- Adapter 1318/10
- Adapter 1318/11

Volkswagen AG does not guarantee or accept any liability with respect to the correctness of information in this document. Copyright by Volkswagen AG. Reproduction for commercial purposes in part or in whole is not permitted unless authorised by Volkswagen AG.
satelettronica

- Adapter 1318/16

Test conditions

- Fuel pump delivery rate OK, checking delivery rate:

=> Repair group 20; Removing and installing parts of the fuel supply system; Checking fuel pump Removing and installing parts of the fuel supply system Checking fuel pump

Test sequence

Warning! Fuel system is under pressure! Before opening the system place a cloth around the connection. Then release pressure by carefully loosening the connection.

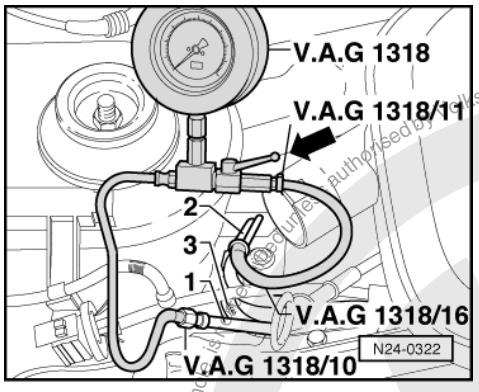

- -> Pull the fuel supply hose (white marking) -1- off fuel supple pipe -2-.
- Connect pressure measured device V.A.G 1318 using adapter 1318/10 to hose and using adapters /11 and /16 to fuel supply pipe.
- Open measured device cut-off tap. (The handle points in throughflow direction -arrow-).
- Start the engine and run at idling speed.
- Measure fuel pressure.
  Specification: Approx. 2.5 bar

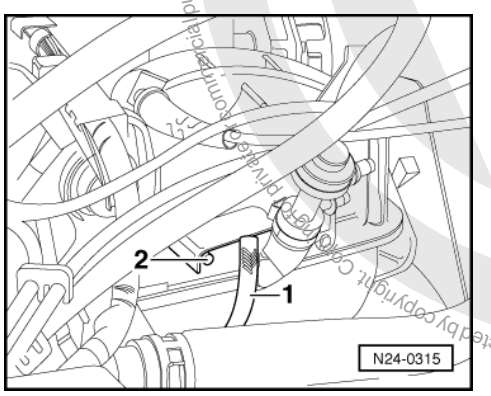

- -> Pull vacuum hose off fuel pressure regulator -1- at intake pipe -2-. The fuel pressure must increase
  to approx. 3.0 bar.
- Switch off ignition.
- Check for leaks and holding pressure by watching pressure drop on gauge. After 10 minutes there must be a residual pressure of
  at least 2 bar.

If the holding pressure drops below 2 bar:

- Start the engine and run at idling speed.

Protected by copyright. Copyright by Volkswagen AG.
Volkswagen AG does not guarantee or accept any liability with respect to the correctness of information in this document.
satelettronica

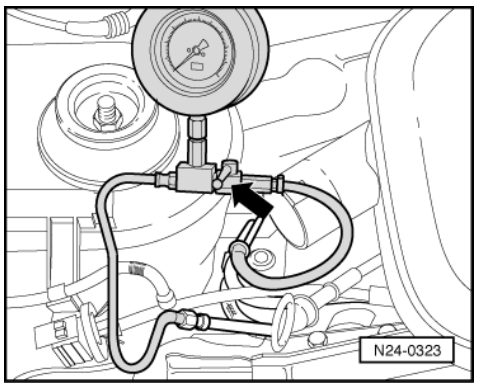

- -> Switch ignition off after the pressure has built-up. At the same time close pressure measured device cut-off tap (handle cross throughflow direction -arrow-).
- Observe pressure drop on gauge.

If the pressure does not drop:

- Check fuel pump non-return valve.

=> Repair group 20; Removing and installing parts of the fuel supply system; Checking fuel pump non-return valve. Removing and installing parts of the fuel supply system Checking fuel pump non-return valve.

If the pressure drops again:

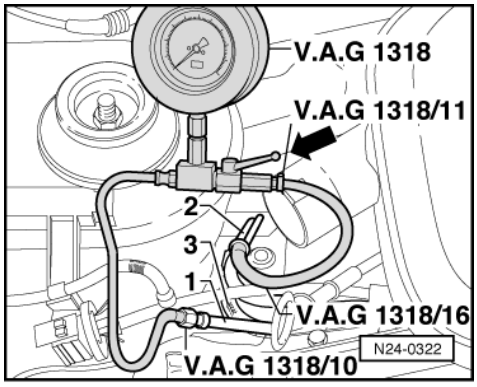

- -> Open pressure tester V.A.G 1318 shut-off tap (handle in throughflow direction -arrow-).
- Start the engine and run at idling speed.
- Switch ignition off after the pressure has build-up. At the same time pinch/seal the return hose (with blue marking) -3- together.

If the pressure does not drop:

- Renew fuel pressure regulator
  =>Page 27 , item 4 .

If the pressure drops again:

- Check pipe connections, O-rings on fuel manifold and injectors for leaks.
- Check pressure gauge for leaks.

Note:

Before removing pressure gauge place a cloth around the connections to be loosened.

Protected by copyright. Copying for private or commercial purposes, in part or in whole, is not permitted unless authorised by Volkswagen AG. Volkswagen AG does not guarantee or accept any liability with respect to the correctness of information in this document. Copyright by Volkswagen AG.
satelettronica

1.25 - Checking intake air system for leaks (unmetered air)

Special tools, testers, measuring instruments and auxiliary items required

- Fault reader V.A.G 1551 or vehicle system tester V.A.G 1552 with cable V.A.G 1551/3
- Engine leak detector spray G 001 800 A1

Test sequence

Notes:

- The vacuum in the intake system will cause the leak detector spray to be drawn in with the unmetered air. The leak detector spray reduces the ignitability of the mixture. This leads to a drop in engine speed and to a change of Lambda probe reading.
- The safety precautions listed on the container must be adhered to.

- Connect fault reader V.A.G 1551 (V.A.G 1552). Start engine and select "Address word" 01 of engine control unit. When doing this the engine must be running at idling speed.
  (Connecting fault reader and selecting engine control unit => Page 2 .)

-> Indicated on display:

```
Rapid data transfer      HELP
Select function XX
```

- Press keys 0 and 8 for the function "Read measured value block" and confirm entry with Q key.

-> Indicated on display:

```
Read measured value block      HELP
Input display group number XXX
```

- Press keys 0, 0 and 1 for "Display group number 1" and confirm entry with Q key.

-> Indicated on display:
(1...4 = Display zones)

```
Read measured value block    1
     1      2      3      4
```

- Note engine speed in display zone 1.
- Note Lambda probe voltage in display zone 3 and the area it fluctuates in.
- Systematically spray parts of the intake system with engine leak detector spray.

Engine speed or Lambda probe voltage does not change:

- Press the ⇒key.
- Press keys 0 and 6 for the function "End output" and confirm entry with the Q key.

If the engine speed drops or the Lambda probe voltage changes:

- Press the ⇒key.
- Press keys 0 and 6 for the function "End output" and confirm entry with the Q key.
- Check sprayed areas of intake system for leaks and rectify if necessary.

1.26 - Checking intake air preheating

Checking regulating flap

- Remove air cleaner intake support.

Copyright by Volkswagen AG. Volkswagen AG does not guarantee or accept any liability with respect to the correctness of information in this document. Copying for private or commercial purposes, in part or in whole, is not permitted without the express consent of Volkswagen AG.
satelettronica

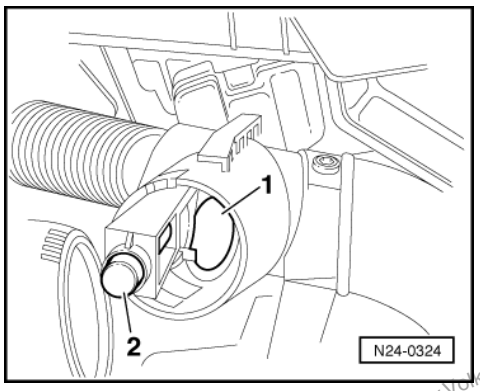

- -> Check control flap position -1-:
  - Above +23 °C flap must close warm air connection
  - Below +10 °C flap opens warm air connection

Note:

The function of the thermo element -2- can be checked easily by spraying with a commercial chilling agent.

Protected by copyright. Copying for private or commercial purposes, in part or in whole, is not permitted unless authorised by Volkswagen AG. Volkswagen AG does not guarantee or accept any liability with respect to the correctness of information in this document. Copyright by Volkswagen AG.

satelettronica

1.27 - Wire routing engine wiring loom

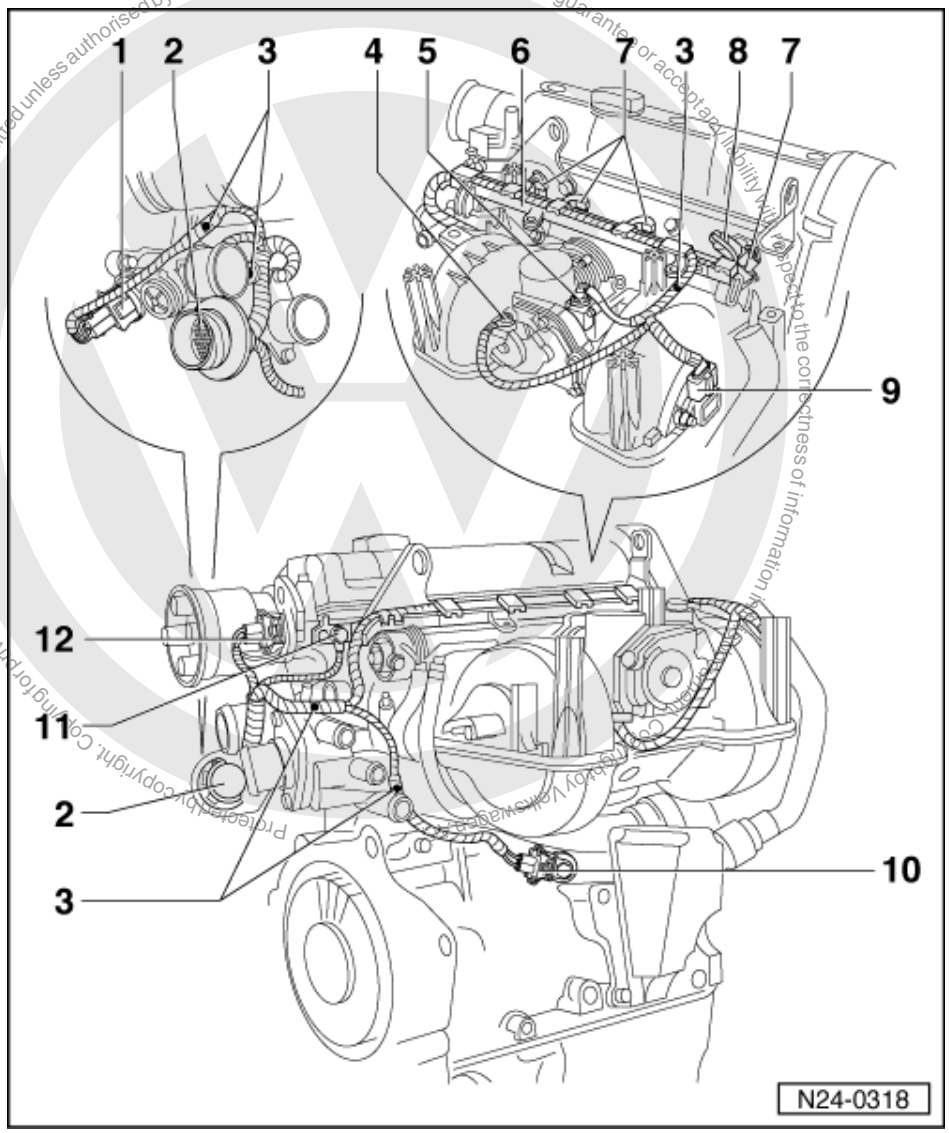

1 Coolant temperature sender (G62)
2 Central connector
3 Push-in clip
- Attached to wiring loom

4 Earth connection
- For throttle valve control part

5 Throttle valve control part (J338)
6 Cable guide
7 Injectors (N30...N33)
8 Oil pressure switch (F22)

satelettronica

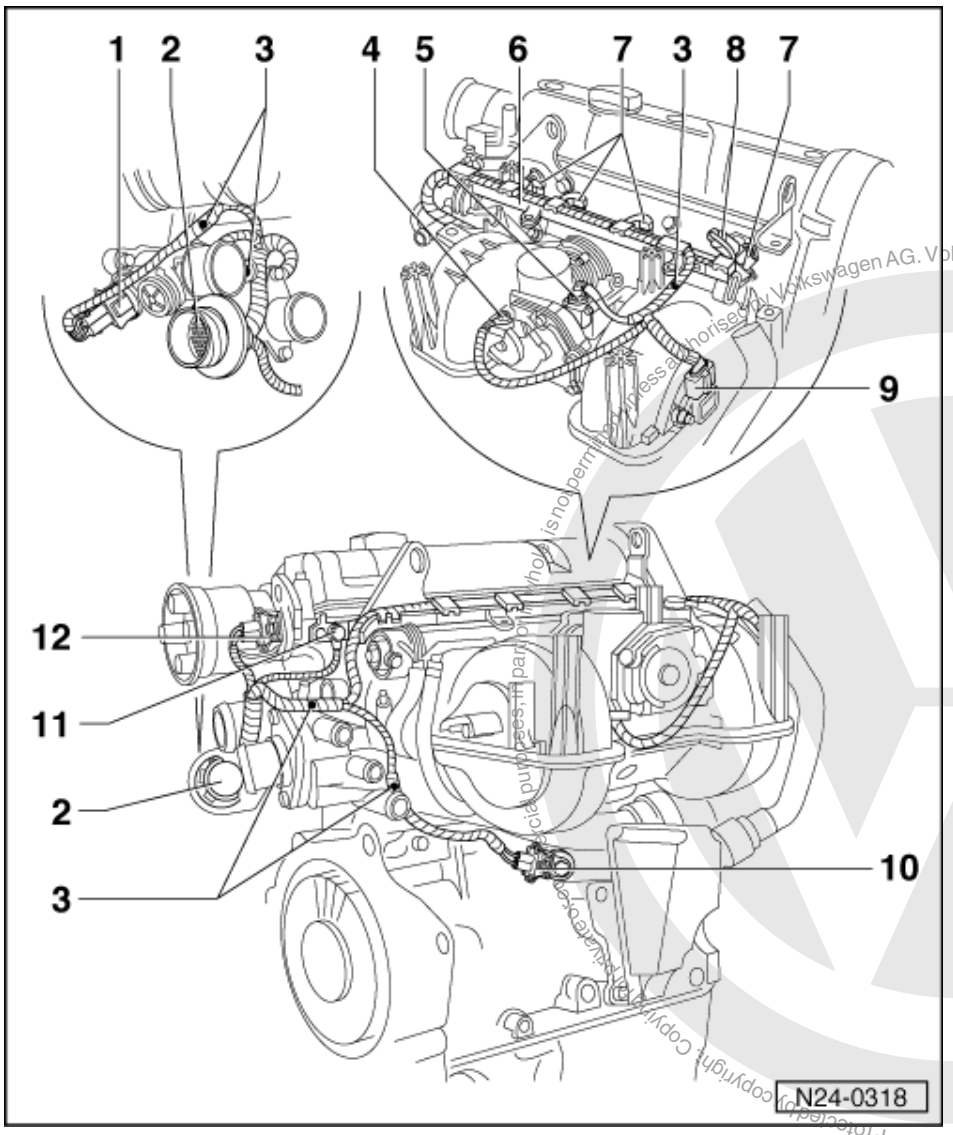

9 Intake pipe pressure sender (G71) with intake air temperature sender (G42)
10 Knock sensor 1 (G61)
1 Earth connection
- Engine earth

2 Hall sender (G40)

satelettronica
Copyright by Volkswagen AG. Volkswagen AG does not guarantee or accept any liability with respect to the correctness of information in this document.

28 - Ignition system

1 - Servicing ignition system

1.1 - Servicing ignition system

1.2 - General notes to ignition system

- Only the components which specifically relate to the ignition system are dealt with here. For the other components of the injection and ignition system => Repair group 24.
- Disconnecting and connecting the battery must only be done with the ignition switched off, otherwise the engine control unit could be damaged.
- The engine control unit is equipped with self diagnosis.
- Components marked with * are checked via the self diagnosis
  => Page 3 , interrogating and erasing fault memory.
- For trouble-free operation of the electrical components a voltage of at least 11.5 V is necessary.
- During some checks it is possible that the control unit will recognise and store a fault. Therefore after completing all checks and repairs the fault memory must be interrogated and if necessary erased.
  => Page 3 , interrogating and erasing fault memory

Safety precautions => Page 74

Test data, spark plugs => Page 74

Protected by copyright. Copyright by Volkswagen AG.
satelettronica

1.3 - Removing and installing parts of the ignition system

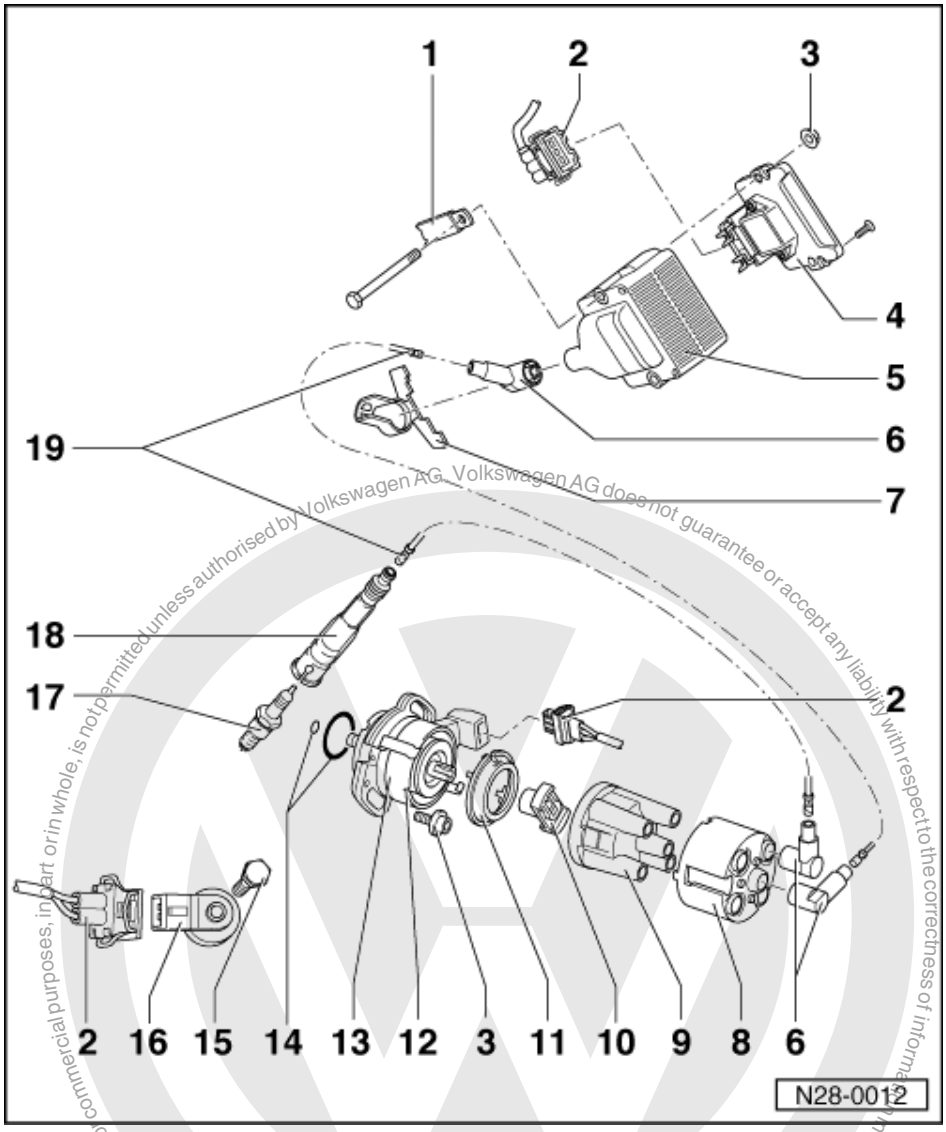

1 Earth strap
2 Connector
3 10 Nm
4 Ignition transformer output stage (N157)
- Checking => Page 77
- Only bolted version can be individually replaced

5 Ignition transformer (N152)
- Checking => Page 77

6 Suppressor
- 0.6...1.4 kω

7 Rotating latch
8 Screening cap

Protected by copyright. Copyright by Volkswagen AG.
Copyright by Volkswagen AG. Volkswagen AG does not guarantee or accept any liability with respect to the correctness of information in this document.
Copyright by Volkswagen AG, in part or in whole, is not permitted unless authorised by Volkswagen AG for commercial purposes.
satelettronica

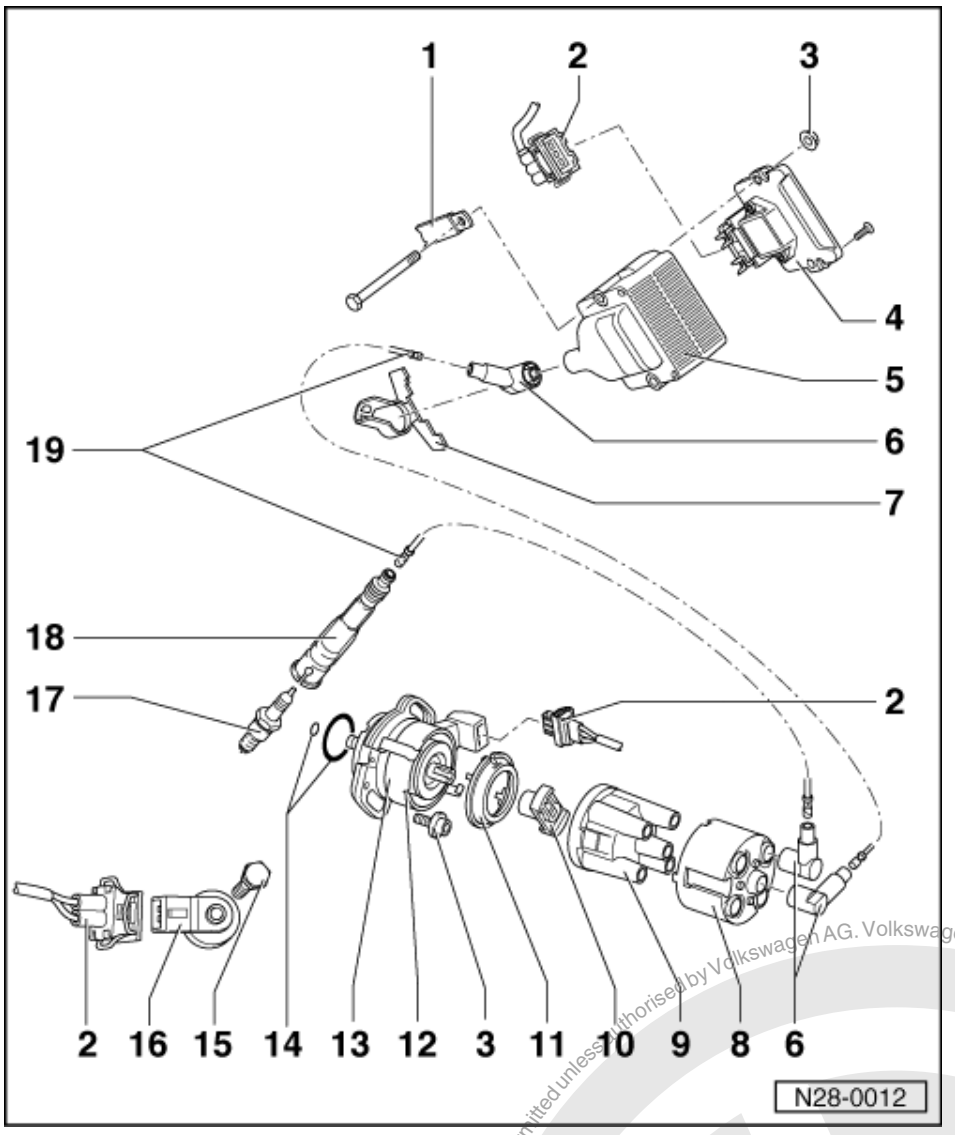

9 Distributor cap
- Check for cracks and signs of tracking
- Check contact wear
- Clean before fitting
- Check carbon brush for wear and freedom of movement

10 Rotor arm
- Marking: R1
- 0.6...1.4 kω

11 Dust cap

12 No. 1 Cyl. marking

13 Ignition distributor with Hall sender (G40)*
- Dismantling and assembling => Page 73
- Checking and adjusting ignition timing => Page 74
- Checking Hall sender => Page 76

Protected by copyright. Copying for private or commercial purposes, in part or in whole, is not permitted unless authorised by Volkswagen AG. Volkswagen AG does not guarantee or accept any liability with respect to the correctness of information in this document. Copyright by Volkswagen AG.
satelettronica

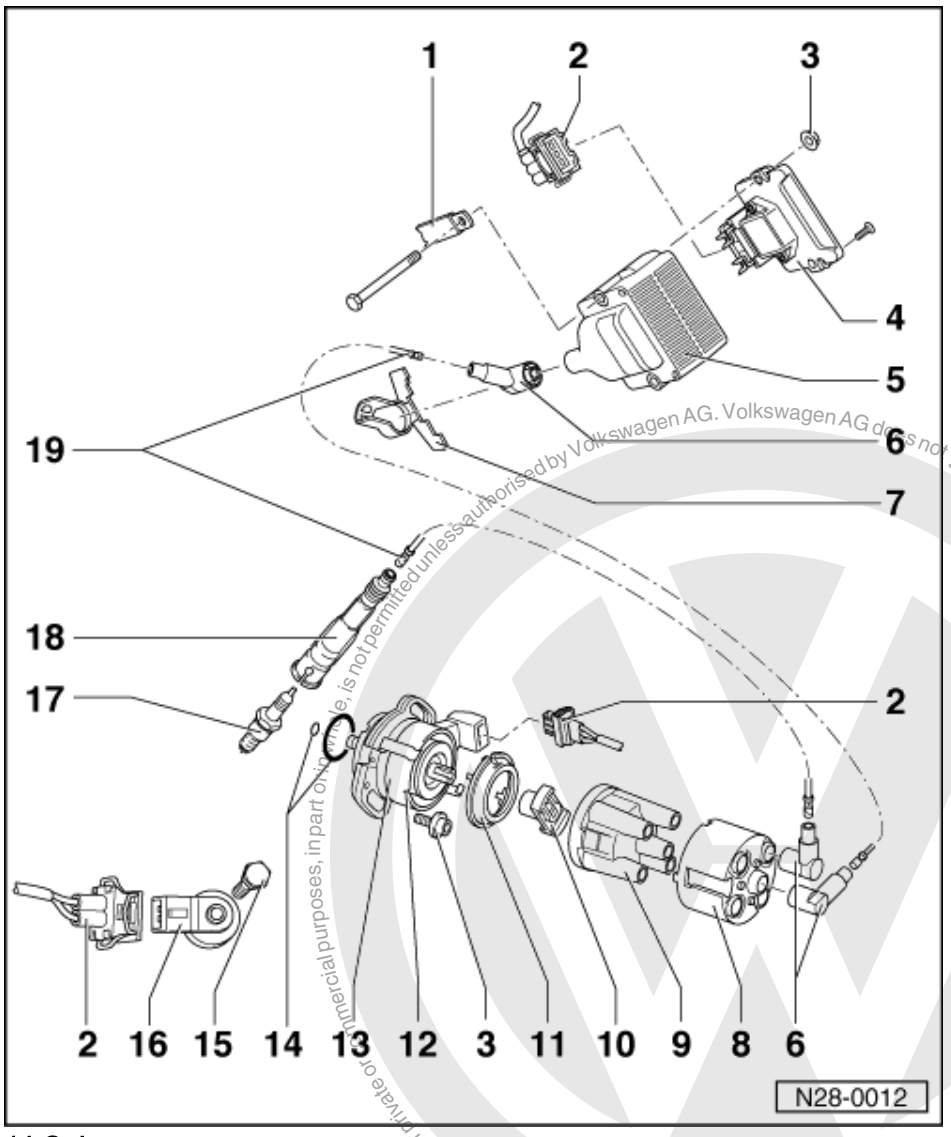

14 O ring
- Renew if damaged

15 20 Nm
- Tightening torque influences the function of the knock sensor

16 Knock sensor 1 (G61)*
- Sensor and connector contacts are gold-plated

17 Spark plug, 25 Nm
- Type and electrode gap
  => Page 74

18 Spark plug connector
- 4...6 kω

19 H.T. cable
- Check for continuity

Protected by copyright. Copying for private or commercial purposes, in part or in whole, is not permitted unless authorised by Volkswagen AG. Volkswagen AG does not guarantee or accept any liability with respect to the correctness of information in this document. Copyright by Volkswagen AG.
satelettronica

1.4 - Dismantling and assembling distributor

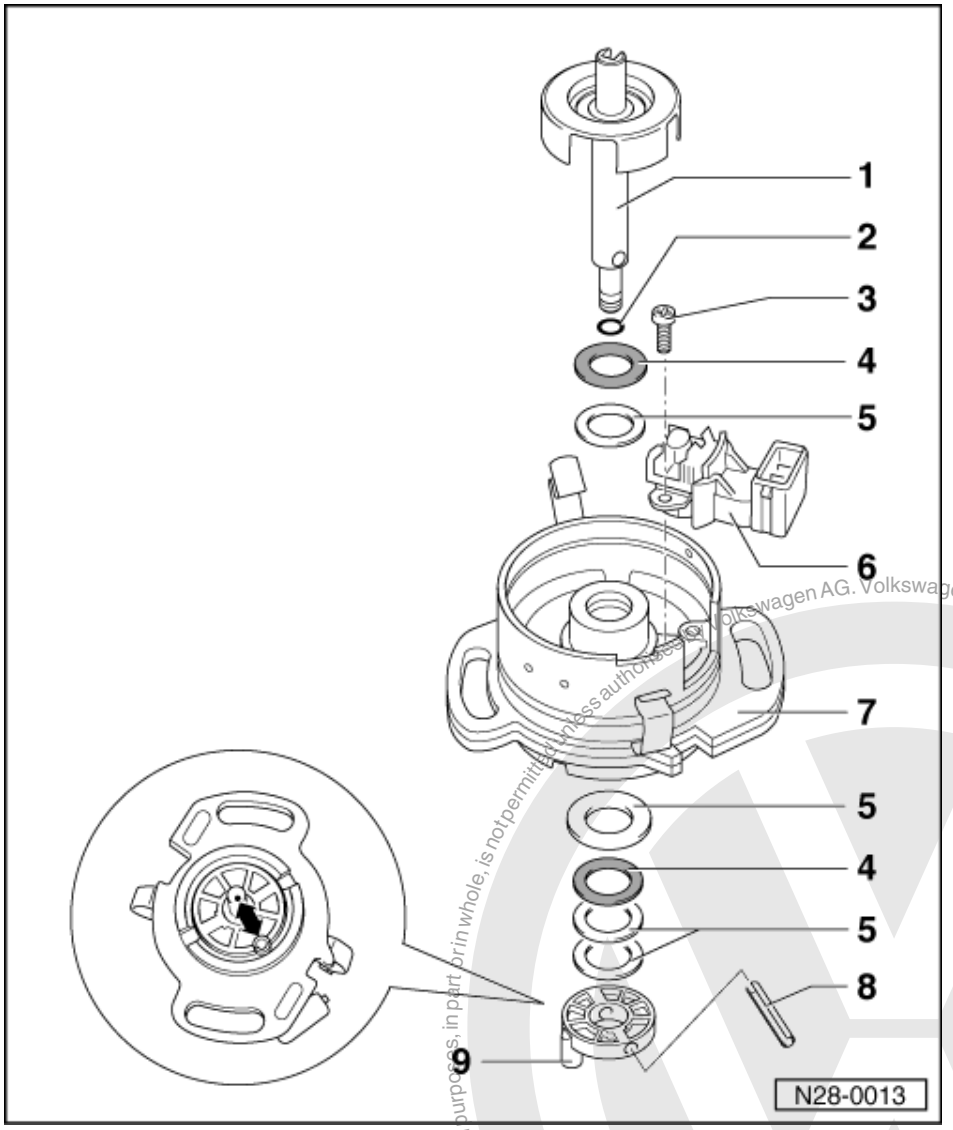

1 Distributor shaft
- With Hall sender rotor
- Pull out after removing the spring pin -7-

2 O ring
- Renew if damaged

3 3 Nm

4 Plastic washer

5 Shim(s)

6 Hall sender (G40)
- Checking => Page 76

7 Distributor body

8 Spring pin

9 Coupling
- Before removing mark position of drive tongue to shaft - 1 -

Protected by copyright. Copying for private or commercial purposes, in part or in whole, is not permitted unless authorised by Volkswagen AG. Volkswagen AG does not guarantee or accept any liability with respect to the correctness of information in this document. Copyright by Volkswagen AG.
satelettronica

1.5 - Safety precautions

To prevent injuries to persons and/or damage to the injection and ignition system, the following must be observed:

- Do not touch or pull off ignition wiring when engine is running or turning at starter speed.
- The ignition must be switched off when disconnecting or connecting injection and ignition system wiring as well as test instrument cables.
- If the engine is to be turned at starter speed, without starting, e.g. when checking compressions, pull plug off Hall sender (distributor).
- Do not connect a capacitor to terminal 1 (-).
- Do not replace 1 kω (identification: R1) with a different type even for radio interference suppression.
- For suppression purposes only 1 kω resistances are to be used on the H.T. leads and 5 kω spark plug connectors.

1.6 - Adjustment data, Spark plugs

Engine code	AEE
Ignition timing1)	
Test value	3...8 °BTDC
Adjusting value	6±1 °BTDC
Speed	1150...1400 rpm2)
Ignition timing	1-3-4-2
Spark plugs1)	
VW/Audi	101 000 036AA; 101 000 050AC; 101 000 040AD
Manufacturer's designation	BUR6ET; W7LTCR; 14GH-7DTUR
Electrode gap	BUR6ET, 14GH-7DTUR: 0.7...0.9 mm W7LTCR: 0.9...1.1 mm
Tightening torque	25 Nm

1) The up-to-date figures and the spark plug change intervals:

=> Exhaust emissions test binder

2) The rpm is increased by the 1AV control unit in "04 basic setting" function.

1.7 - Checking and adjusting ignition timing

Special tools, testers, measuring instruments and auxiliary items required

- Fault reader V.A.G 1551 or vehicle system tester V.A.G 1552 with cable V.A.G 1551/3
- Ignition tester V.A.G 1767 or V.A.G 1367 with HT pick-up clamp V.A.G 1367/8

Check conditions

- Coolant temperature at least 80 °C
- No faults must be stored in fault memory

Protected by copyright. Copying for private or commercial purposes, in part or in whole, is not permitted unless authorised by Volkswagen AG. Volkswagen AG does not guarantee or accept any liability with respect to the correctness of information in this document. Copyright by Volkswagen AG.
satelettronica

=> Page 3 , interrogating fault memory

Test sequence

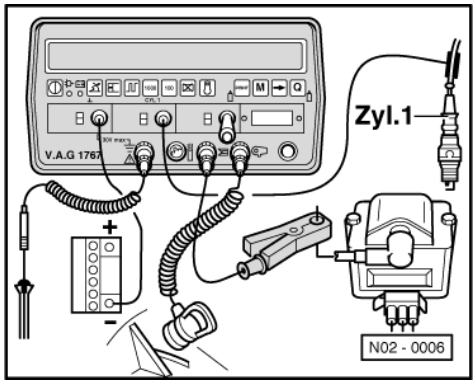

- -> Connect ignition tester V.A.G 1767 or ignition tester V.A.G 1367 with HT pick-up clamp V.A.G 1367/8.
- Connect fault reader V.A.G 1551 (V.A.G 1552). Start engine and select "Address word" 01 of engine control unit. When doing this the engine must be running at idling speed.
  (Connecting fault reader and selecting engine control unit => Page 2 .)

-> Indicated on display:

```
Rapid data transfer      HELP
Select function XX
```

- Press keys 0 and 4 for the function "Introduction of basic setting" and confirm entry with Q key.

-> Indicated on display:

```
Basic setting      HELP
Input display group number XXX
```

- Press keys 0, 0 and 1 for "Display group number 1" and confirm entry with Q key.

-> Indicated on display:
(1...4 = Display zones)

```
System in basic setting 1
     1     2     3     4
```

Do not continue with check until an 8 digit number block 00000000 appears in the 4th display zone.

Note:

If at one or more positions a 1 is displayed in display zone 4, the test conditions have not been fulfilled:

=>Page 16 ; Relevance of figures in 8 digit number block

- The engine control unit increases the idling speed to 1150...1400 rpm.
- Check ignition timing.
  Specification: 3...8 ° before TDC1)
- Adjust ignition timing by turning distributor, if necessary.
  Adjustment figure: 6±1 ° before TDC1)

  1) Up-to-date specifications:

=> Emissions test binder

- Press ⇒key.
- Press keys 0 and 6 for the function "End output" and confirm entry with the Q key.
- Check basic setting, if necessary.
  => Page 35 .

Protected by copyright. Copyright by Volkswagen AG. Volkswagen AG does not guarantee or accept any liability with respect to the correctness of information in this document. Copyright by Volkswagen AG. Volkswagen AG. Volkswagen AG. Volkswagen AG does not permitted unless authorised by Volkswagen AG. Volkswagen AG does not guarantee or accept any liability with respect to the correctness of information in this document. Copyright by Volkswagen AG.
satelettronica

1.8 - Checking Hall sender

Special tools, testers, measuring instruments and auxiliary items required

- Test box V.A.G 1598/18
- Hand multimeter V.A.G 1526 or multimeter V.A.G 1715
- Adapter set V.A.G 1594
- Current flow diagram

Test conditions

- If a fault on Hall sender is recognised by self diagnosis.

Test sequence

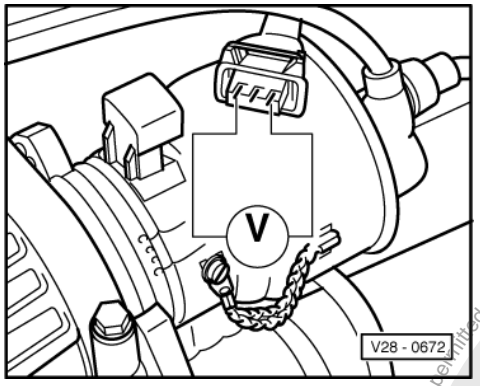

- Pull connector off Hall sender (distributor).
- -> Connect multimeter to measure voltage using aux. cables from V.A.G 1594 to the outer contacts of the connector.
- Switch on ignition.
  Specification: min. 9 V
- Switch off ignition.

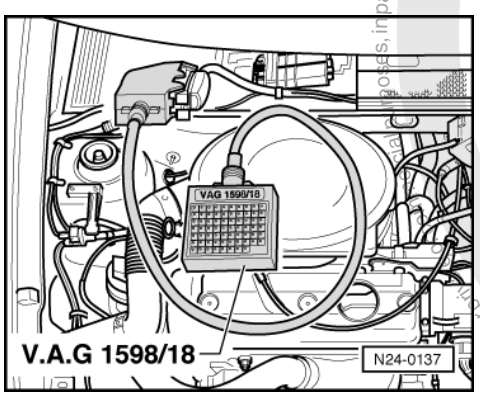

- -> Connect test box V.A.G 1598/18 to control unit wiring loom.
- Check wiring between test box and connector for open circuit according to current flow diagram.
  Contact 1+socket 17
  Contact 2+socket 13
  Contact 3+socket 8
  Wire resistance: Max. 1.5 ω
- Additionally check wires for short to one another.
  Specification: ∞ω

If no wiring fault is detected and voltage was present between contacts 1+3:

- Renew Hall sender => Page 73 , item 6 .

Protected by copyright. Copying for private or commercial purposes, in part or in whole, is not permitted unless authorised by Volkswagen AG. Volkswagen AG does not guarantee or accept any liability with respect to the correctness of information in this document. Copyright by Volkswagen AG.
satelettronica

If no wiring fault is detected and no voltage was present between contacts 1+3:

- Renew engine control unit
  => Page 26 , item 30

1.9 - Checking ignition transformer

Special tools, testers, measuring instruments and auxiliary items required

- Hand multimeter V.A.G 1526 or multimeter V.A.G 1715
- Adapter set V.A.G 1594

Test sequence

- Pull connector and H.T. cable off ignition transformer (N152).

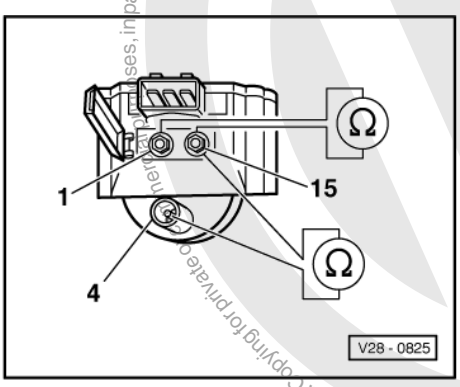

- -> Check primary resistance between terminals 1 and 15.
  Specification: 0.5...1.5 ω
- Check secondary resistance between terminals 4 and 15.
  Specification: 2.5...4 kω

If the specifications are not attained:

- Replace ignition transformer => Page 70 , item 5 .

1.10 - Checking ignition transformer output stage

Special tools, testers, measuring instruments and auxiliary items required

- Test box V.A.G 1598/18
- Hand multimeter V.A.G 1526 or multimeter V.A.G 1715
- Diode test lamp V.A.G 1527
- Adapter set V.A.G 1594
- Current flow diagram

Check conditions

- Hall sender OK.
- Ignition transformer OK.

Copyright by Volkswagen AG. Volkswagen AG does not guarantee or accept any liability with respect to the correctness of information in this document. Copyright by Volkswagen AG. Protected by copyright. Copying for private or commercial purposes, in part or in whole, is not permitted unless authorised by Volkswagen AG.
satelettronica

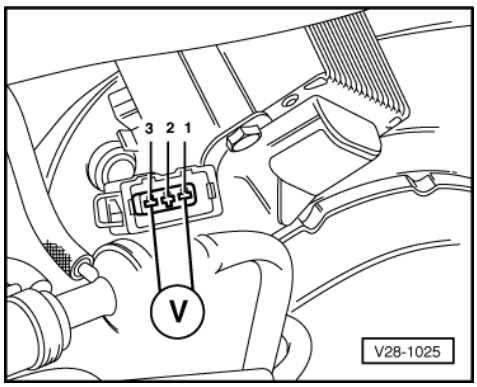

Checking voltage supply

- Pull 3 pin connector off ignition transformer.
- -> Connect multimeter to measure voltage using aux. cables from V.A.G 1594 to the contacts 1+3 of the disconnected connector.
- Switch ignition on.
  Specification: at least 11 V

If no voltage is present:

- Switch off ignition.
- Check wire between 3 pin connector contact 1 and earth for open circuit according to current flow diagram.
  Wire resistance: Max. 1.5 ω

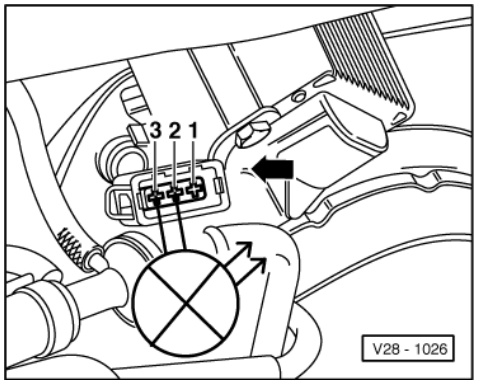

- Check wire between 3 pin connector contact 3 and relay plate for open circuit according to current flow diagram.
  Wire resistance: Max. 1.5 ω

Checking activation

- Pull connector off injectors.
- -> Connect diode test lamp V.A.G 1527 using aux. cables from V.A.G 1594 and adapters V.A.G 1594/15 to contacts 2+3 of the connector.

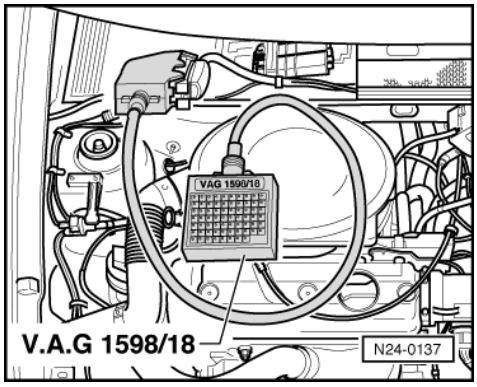

Protected by copyright. Copying for private or commercial purposes, in part or in whole, is not permitted unless authorised by Volkswagen AG. Volkswagen AG does not guarantee or accept any liability with respect to the correctness of information in this document. Copyright by Volkswagen AG.
satelettronica

- Operate starter and check ignition signal from engine control unit.
  LED must flicker

The LED does not flicker:

- -> Connect test box V.A.G 1598/18 to control unit wiring loom.
- Check wire between test box socket 24 and 3 pin connector contact 2 for open circuit according to current flow diagram.
  Wire resistance: Max. 1.5 ω
- Additionally check wires for short to one another.
  Specification: ∞ω

If no wiring fault is detected and voltage was present between contacts 1+3:

- Renew engine control unit
  => Page 26 , item 30

If the voltage supply and activation is OK.:

- Connect 3 pin connector and H.T. cable to ignition transformer.

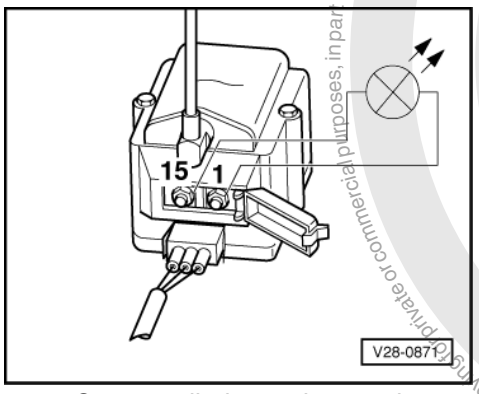

- -> Connect diode test lamp using aux. cables and clamps to the contacts 1 and 15 on ignition transformer.

Warning! During the following test do not touch the terminals of the ignition transformer or test cables.

- Operate starter.
  The LED must flicker

1.11 - Checking knock sensor

Special tools, testers, measuring instruments and auxiliary items required

- Test box V.A.G 1598/18
- Hand multimeter V.A.G 1526 or multimeter V.A.G 1715
- Adapter set V.A.G 1594
- Current flow diagram

Test conditions

- Self-diagnosis has recognized a fault on knock sensor.

Copyright by Volkswagen AG. Volkswagen AG does not guarantee or accept any liability with respect to the correctness of information in this document. Copyright by Volkswagen AG. Protected by copyright. Copying for private or commercial purposes, in part or in whole, is not permitted unless authorised by Volkswagen AG.
satelettronica

Test sequence

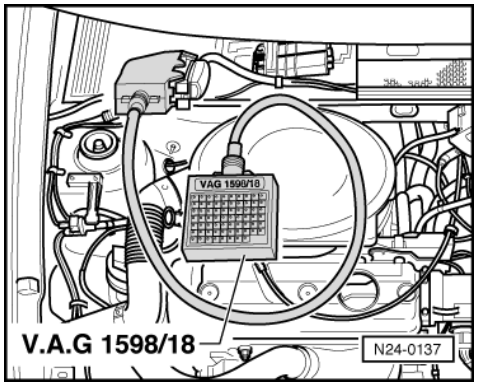

- -> Connect test box V.A.G 1598/18 to control unit wiring loom.
- Check wiring and knock sensor for short circuit.
  Sockets: 19+39, 39+45, 19+45
  Specification: ∞ω

If no short is detected:

- Remove starter.

=> Repair group 27; Removing and installing starter Removing and installing starter

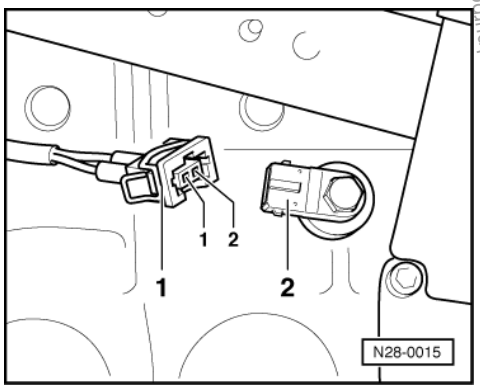

- -> Pull connector -1- off knock sensor 1 (G61) -2-.
- Check wiring between test box and knock sensor for open circuit according to current flow diagram.
  Contact 1+socket 39
  Contact 2+socket 19
  Wire resistance: Max. 1.5 ω
- Measure resistance between knock sensor contacts.
  Specification ∞ω

If no wiring fault is detected:

- Loosen knock sensor and tighten again to 20 Nm.
- Carry out test drive.

  During the road test the following operating conditions must be fulfilled:
  - The coolant temperature must exceed 80 °C .
  - When the temperature is reached, the operating conditions
    Idling
    Part throttle
    Full throttle
    Overrun
    must be attained several times.
  - At full throttle the speed must exceed 3500 rpm.

- Again interrogate the control unit fault memory.

Protected by copyright. Copying for private or commercial purposes, in part or in whole, is not permitted unless authorised by Volkswagen AG. Volkswagen AG does not guarantee or accept any liability with respect to the correctness of information in this document. Copyright by Volkswagen AG.
satelettronica

If the fault is still present:

- Replace knock sensor
  =>Page 72 , item 16 .

Protected by copyright. Copying for private or commercial purposes, in part or in whole, is not permitted unless authorised by Volkswagen AG. Volkswagen AG does not guarantee or accept any liability with respect to the correctness of information in this document. Copyright by Volkswagen AG.

satelettronica